SnowDogg by Buyers
9049 Tyler Blvd. • Mentor, Ohio 44060
Phone (440) 974-8888 • Fax (440) 974-0165
Toll-Free Fax 800-841-8003 • snowdoggplows.com

SnowDogg® VX

OWNER'S MANUAL

PATENTS PENDING

16992400 Rev C

Table of Contents

1. Warnings/Vehicle Application ..... *pg. 2*
2. About the plow ..... *pg. 3*
3. Registration Information/Website ..... *pg. 3*
4. Snowplow Mounting/Dismounting ..... *pg. 4*
5. Mechanical Installation ..... *pg. 5-6*
6. Harness Installation ..... *pg. 7-9*
7. Storage and Maintenance ..... *pg. 10*
8. Parts Diagram and BOM ..... *pg. 11-14*
- **a.** Lift Frame ..... *pg. 11*
- **b.** A-frame ..... *pg. 11*
- **c.** Moldboard ..... *pg. 12*
- **d.** Hydraulic Power Unit ..... *pg. 13*

9. Troubleshooting ..... *pg. 15-16*
10. Snow Plowing Tips ..... *pg. 16*

VX Installation/Reference Manual

WARNING

Many newer trucks are equipped with air bags. DO NOT under any circumstances disable or remove or relocate any sensors or other components related to the operation of the air bags.

WARNING

Always follow the vehicle manufacturer's recommendations relating to snowplow installation.
For recommended vehicle models refer to the SnowDogg Application Chart and Selection Guide.

WARNING

Vehicles equipped with air bags are designed such that the air bags will be activated in a frontal collision equivalent to hitting a solid barrier (such as a wall) at approximately 14 mph or more, or, roughly speaking, a frontal perpendicular collision with a parked car or truck of similar size at approximately 28 mph or more. Careless or high speed driving while plowing snow, which results in vehicle decelerations equivalent to or greater than the air bag deployment threshold described above, would deploy the air bag.

WARNING

Make sure plow is properly attached before moving vehicle.

WARNING

Do not move plow while servicing or place body parts between or under plow parts while moving plow.

WARNING

When transporting, position plow so as not to block vision or plow headlights.

WARNING

DO NOT change blade position when traveling.

WARNING

DO NOT exceed 40 mph when transporting plow.

WARNING

Do not exceed 14 mph when plowing.

WARNING

Always lower blade when vehicle is not in use.

WARNING

Read this manual carefully before operating this snowplow.

CAUTION

SnowDogg VX plows are designed for use on trucks intended for plowing. Vehicle application recommendations are based on the following:

- The vehicle with the snowplow installed must comply with applicable Federal Motor Vehicle Safety Standards (FMVSS).
- The vehicle with the snowplow installed must comply with the vehicle manufacturer's stated gross vehicle and axle weight ratings (found on the driver-side door corner post of the vehicle) and the front and rear weight distribution ratio. In some cases, rear ballast may be required to comply with these requirements.
- In some cases there may be additional limitations and requirements.
- Available capacity decreases as the vehicle is loaded with cargo or other truck equipment, or snowplow accessories are installed.
- If there is uncertainty as to whether available capacity exists, the actual vehicle as configured must be weighed.

Welcome!

Congratulations on your purchase of a SnowDogg plow! The SnowDogg plow by Buyers Products is a heavy-duty, professional grade plow built for your toughest plowing applications. By using this manual for maintenance and safety instructions, you can be sure to optimize the life of your plow.

Your dealer can provide expert assistance and service and is the first line of support. They have first hand knowledge of your plow and the conditions in your area.

Be sure to register your plow after purchase at www.snowdoggplows.com. The required information is shown on the Registration Data Sheet. Registration is required to activate your two year warranty.

REGISTRATION DATA SHEET

Owner's Information

Name: _____

Company: _____

Address: _____

Phone: _____

Fax: _____

E-mail: _____

Purchased From: _____

Purchase Date: _____

Plow Model: _____

Plow Serial#: _____

HPU Serial #: _____

Truck Model: _____

Truck Year: _____

Register your plow at www.snowdoggplows.com to activate your two year warranty.

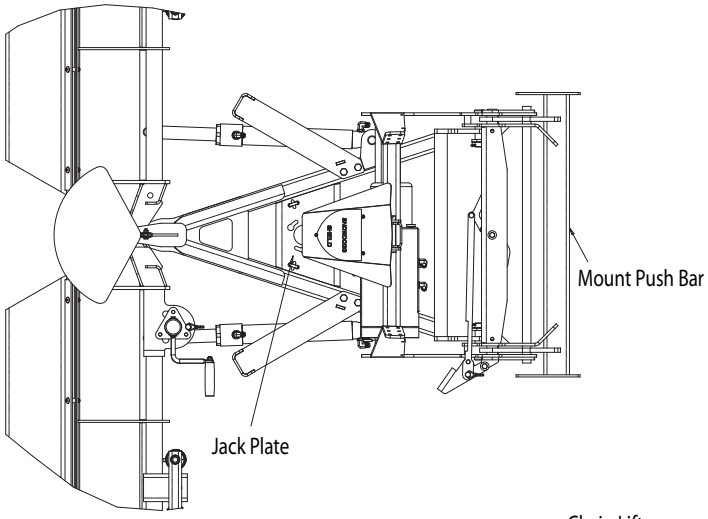

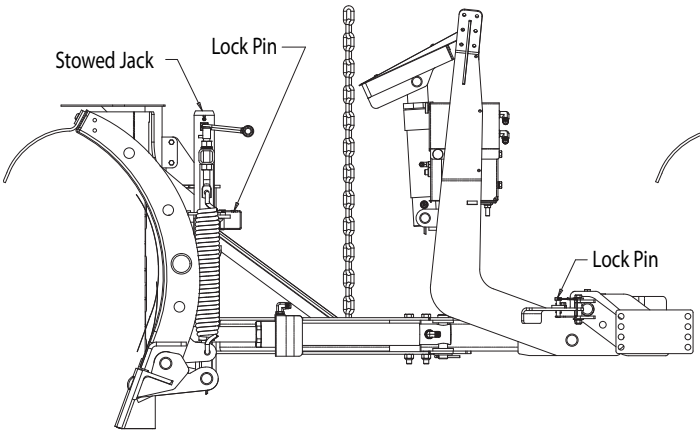

MOUNTED PLOW

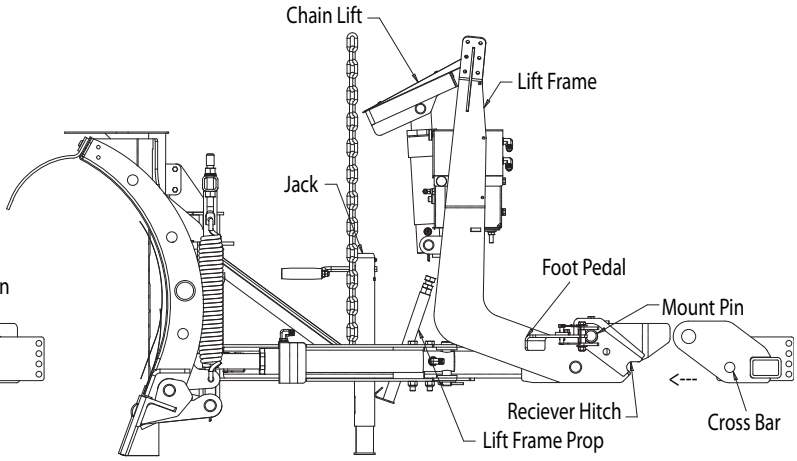

DISMOUNTED PLOW

Mount/Dismount Instructions

Snowplow Mounting *(fig. above)*

1. Check that the pins are fully retracted. The foot pedal should be pushed towards the truck and will lock in the retracted position.

2. Drive in to the plow so that the cross bar on the mount engages with the receiver notch on the plow. Depending on the plow height the jack many need to lowered or raised to fully engage.

3. Pull the foot pedal away from the truck to release the pins.

4. Push up on the lift frame to engage the pins. To verify the lift frame is fully connected, check to see that the gold pins are visible from each side. Insert the lock pin (or padlock) through the foot pedal and pedal linkage.

5. Retract the jack enough to allow its removal. Rotate the jack to disengage from the jack mount plate.

6. Stow the jack on the stow plate located on the driver's side moldboard and insert the lock pin. The jack may also be stored in the truck for added theft prevention.

7. Connect both the lighting & hydraulic control connectors.

Snowplow Dismount *(fig. above)*

1. Put the plow in float by holding the down button for 1 second.

2. Press down on the chain lift to retract the lift cylinder. The chain must have slack for ease of plow removal.

3. Install the jack into the jack mount plate. This will raise the lift frame prop.

4. Extend the jack enough to remove weight from the plow mount pins.

5. Push on the foot pedal and the lift frame towards the vehicle simultaneously. The pins will retract and the lift frame will rotate forward to rest on the lift frame prop.

6. Disconnect the lighting and hydraulic connectors

7. Back away from the snowplow

Installation

SnowDogg snowplows are shipped almost completely assembled to minimize the amount of time from box to plowing. The illustrations are representative only and may differ from your hardware. Please see the parts diagrams for specific part numbers.

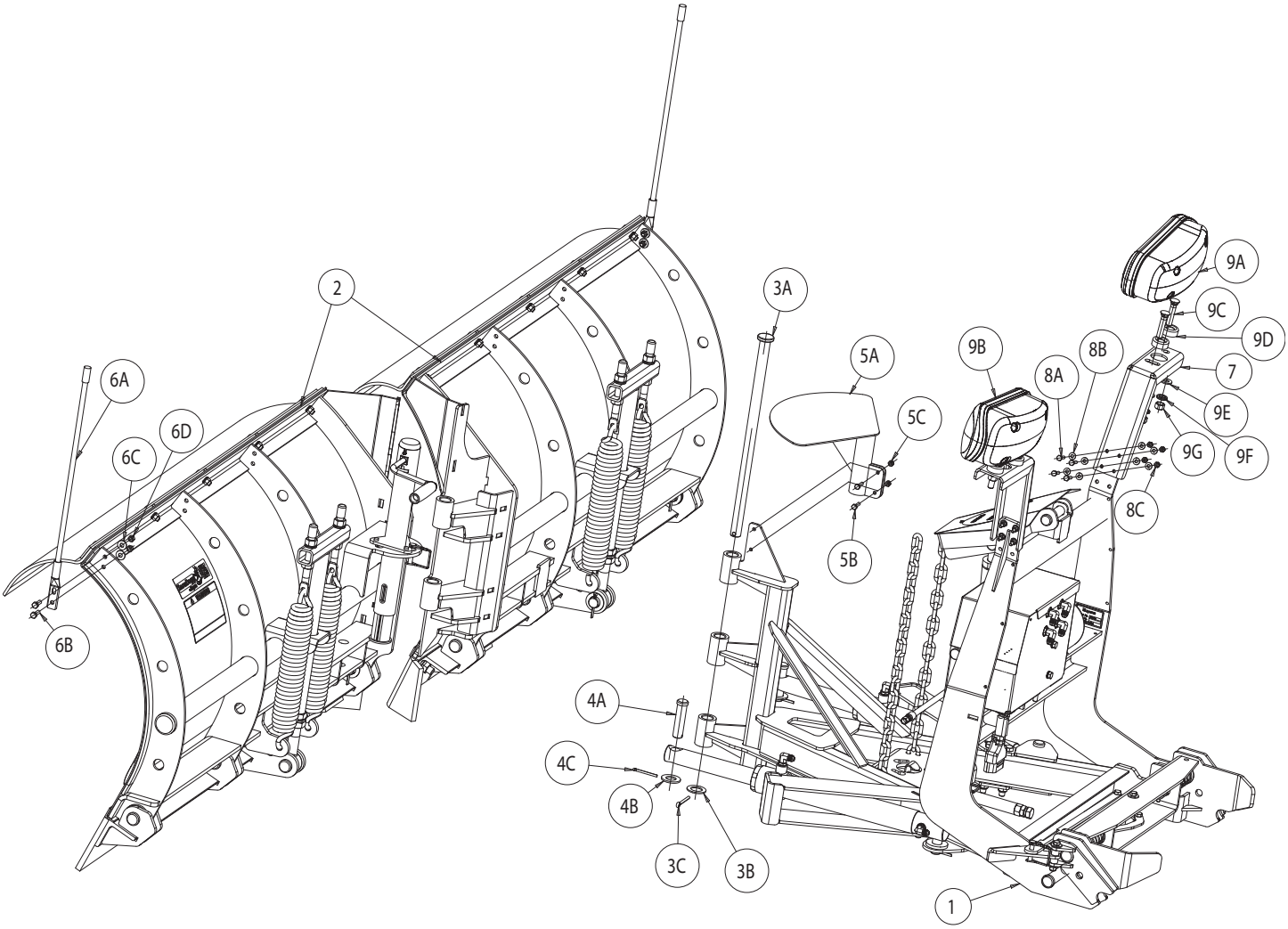

ITEM	QTY.	PART NO.	DESCRIPTION
1	**1**	**16013000**	**VX Lift Frame Assembly**
2	**1**	**16020720**	**VX85 Moldboard w/ Deflector**
		16020730	VX95 Moldboard w/ Deflector
3	**1**	**16101170**	**Hinge Pin Kit, VX Plows**
3a	1		Hinge Pin
3b	1		Washer, Flat, 1", Zn
3c	1		Pin, Cotter, 1/4" x 2", Zn
4	**2**	**16102142**	**Clevis Pin Kit, VX Plows**
4a	2		Clevis Pin, 7/8" x 3-1/4"
4b	2		Washer, Flat, 7/8", Zn
4c	2		Pin, Cotter, 3/16" x 2", Zn
5	**1**	**16113260**	**Cover Kit, VX Moldboard Hinge**
5a	1		Cover Weldment
5b	2		Screw, Hex Cap, 1/4-20 x 1", SST
5c	2		Nut, Nylock, 1/4-20, SST
6	**1**	**16121200**	**Blade Guide Kit**
6a	2		Blade Guide, Orange, 24"

ITEM	QTY.	PART NO.	DESCRIPTION
6b	4		Screw, Cap Hex 5/16-18 x 1, Zn
6c	4		Washer, 5/16 Flat, Zn
6d	4		Nut, Nylock, 5/16-18, Zn
7	**2**	**16111510**	**Light Brackets**
8	**1**	**16111512**	**Light Hardware Kit**
8a	8		Screw, Cap Hex 1/4-20 x 1-1/4 Zn
8b	16		Washer, Flat 1/4 Zn
8c	8		Nut, Nylock, 1/4-20 Zn
9	**1**	**16160700**	**Light Kit**
9a	1		Ps Side Light
9b	1		Ds Side Light
9c	4		Bolt, Plow Flathead, 1/2-13 x 2.5 Zy
9d	4		Washer, Spherical, Zy
9e	4		Washer, Flat, 1/2 Zy
9f	4		Washer, Lock, 1/2 Zy
9g	4		Nut, 1/2-13 Zy

Snowplow Assembly

1. Attach the moldboards to the lift frame kit using the hinge pin, washer, and cotter pin as shown. Check that the moldboards rotate freely around the hinge pin.
2. Install the two cylinder rods to each moldboard half with the clevis pins, washers and cotter pins as shown.
3. Install the snow deflectors (if desired) by loosening the fasteners on the top of the moldboard. The end two fasteners will need to be removed to slide the deflector between the black painted retainer strip & the stainless steel skin. It may be necessary to clamp the skin in place to allow insertion of the deflector. After the deflectors are in place replace and tighten all fasteners.
4. Install the blade guides using the included hardware kit.
5. Install the lights with the light kit hardware. Do not route the plow side light harness yet as the Passenger and Driver side light connection will vary depending on the truck side installation. Do not tighten the light hardware yet, as they will need to be aimed.
6. The plow may now be set into mounting configuration – install the jack and level the plow to the proper height for mounting to the truck.
7. Grease the seven hinge pin tubes using a needle style grease gun tip. The grease hole is located in the front of each hinge pin tube.
8. Adjust the center cuttings. The gap between the two cutting edges should be between 1/4” - 3/8”.

Vehicle Specific Mount Installation

1. Mount the truck undercarriage as shown in the undercarriage installation instructions. As with the plow, all the fasteners should be checked on a regular basis.
2. After installing the mount and controls, verify that the mount’s push bar height holds the VX a-frame level with the ground. To verify the plow is level, is to check that the plow’s cutting edge is tight to the ground in both the vee and scoop positions. Adjust the mount’s push bar height as required.

Vehicle Specific Headlight Adapter Installation

1. It may be necessary to remove vehicle headlights to access the truck light harness connectors.
2. Install the vehicle specific headlight adapters per included installation instructions.
3. Be sure to route wires and harnesses away from hot surfaces or moving parts.

For safety reasons, the blade drops very slowly on the plow as shipped. To adjust the drop speed of the blade use a flat blade screwdriver and turn the lowering speed adjustment on the front of the hydraulic power unit counter clockwise. Turn it clockwise to slow the blade drop speed. Do this only while the blade is dropped, and tighten the jam nut after adjusting.

HARNESS INSTALLATION

The SnowDogg has two separate harnesses for ease of installation and troubleshooting – a control harness and a light harness. They can be mounted separately. In the case of trucks with central hydraulics or existing auxiliary lights, either harness can be omitted without affecting the functionality of the other system.

⚠ CAUTION

Keep all connectors greased with dielectric grease on a regular basis to minimize corrosion & potential damage or wear to the pins. It is critical that all electrical connections be tight and secure. Loose connections on the plow circuit can cause overheating, component failure, or intermittent opration.

Control Harness

The plow side control harness has been preinstalled. The truck side control harness is routed through the grill, by the battery, and through the firewall to the controller. It is preferable when possible to keep the plow connector on the drivers side to make mount/dismount easier and faster.

Control Harness Diagram

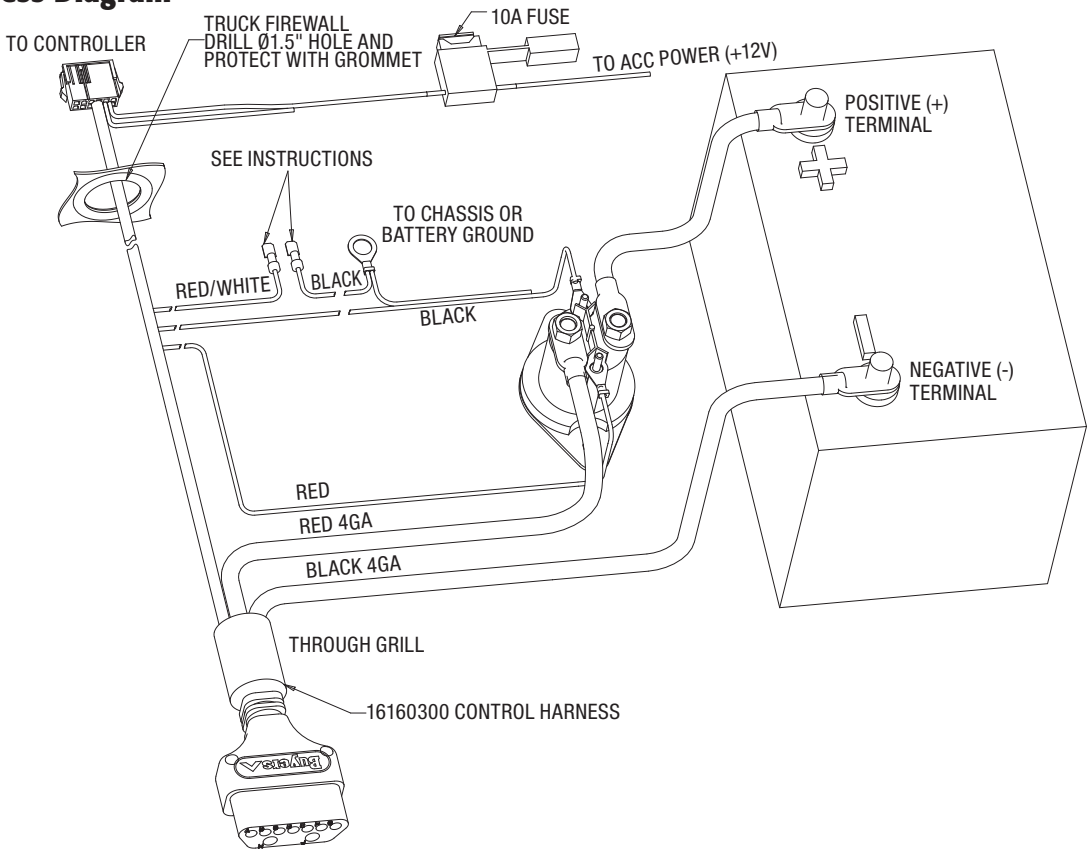

1. Route the CONTROL HARNESS through the truck grill, by the battery, and through the firewall. Some trucks will require drilling a ø1.50" hole through the firewall, while some will have holes provided (usually plugged). Check your truck Owner's Manual for details. If the hole is drilled it is critical that a grommet be used to prevent damage to the wire harness.

2. Mount the MOTOR RELAY in a convenient and secure location on the battery side of the vehicle using the included self tapping screws.

3. The small RED WIRE from the CONTROL HARNESS is connected to a small terminal of the MOTOR RELAY.

4. The small BLACK WIRE from the CONTROL HARNESS has two leads – one is connected to the other

small terminal of the MOTOR RELAY. The other is connected directly to vehicle/chassis ground.
5. The large (4 gage) BLACK WIRE on the CONTROL HARNESS must be connected directly to the NEGATIVE (-) battery terminal. A BATTERY TERMINAL ADAPTER may be required.
6. The large (4 gage) RED WIRE on the CONTROL HARNESS is connected to one of the large terminals on the MOTOR RELAY.
7. The shorter red BATTERY CABLE is used to connect the other large terminal of the MOTOR RELAY with the POSITIVE (+) terminal on the battery. A BATTERY TERMINAL ADAPTER may be required.
8. The CONTROLLER CONNECTOR is routed through the firewall. Wait to complete RELAY HARNESS installation before further steps.
9. Connect the handheld controller and locate in a convenient location for the operator using the included mounting bracket or Velcro.
10. Male spade connectors on the BLACK and RED/WHITE wires will be connected to the LIGHT HARNESS in the next step.

Light Harness

Light Harness Diagram

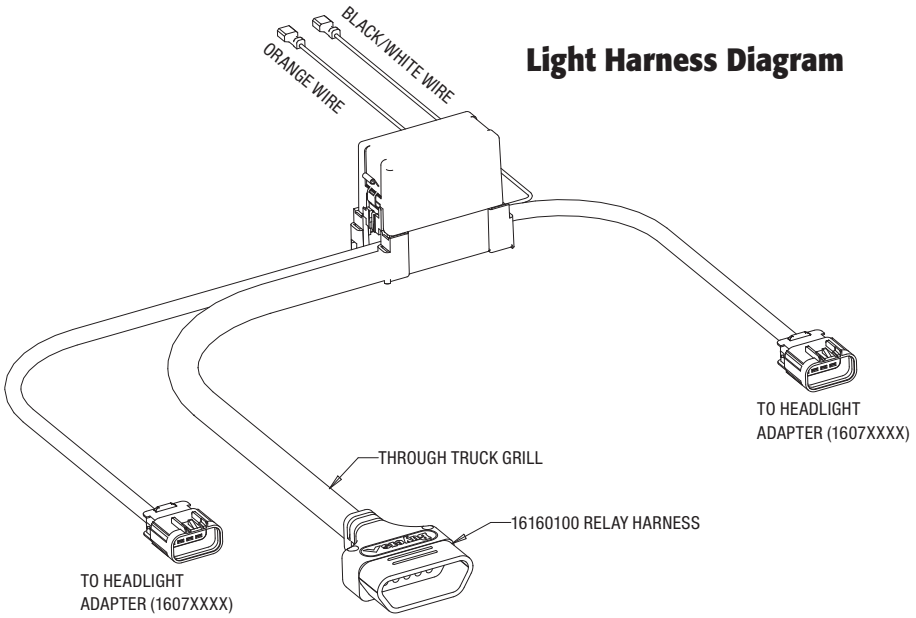

1. Route the RELAY HARNESS through the grill (drivers side preferably) and place the RELAY MODULE close to either the drivers or passenger side headlight (whichever is convenient).
2. A VEHICLE SPECIFIC HEADLIGHT ADAPTER for your plow should be installed between the OEM HARNESS and HEADLIGHT on both the passenger and driver sides. The BROWN wire from the adapter should be spliced into the PARKING light circuit. The PURPLE wire from your adapter should be spliced into the TURN signal circuit.
3. Route and connect the 8-pin connectors on the RELAY HARNESS to the VEHICLE SPECIFIC HEADLIGHT ADAPTERS. There is a LONG and SHORT cable on the RELAY HARNESS. The LONG cable is for the far side of the vehicle. Both CABLES are identical. LEFT and RIGHT turn signals will be determined prior to routing the LIGHT HARNESS on the plow.
4. The ORANGE and BLACK/WHITE wires on the RELAY HARNESS are connected to the RED/WHITE and BLACK wires on the CONTROL HARNESS. Connect them as shown below – see the application guide for specific information on your vehicle. In the case of a standard ground vehicle (switched hot), connect the wires as shown below for standard configuration. In the case of a switched ground vehicle, locate the gray wire with male/female disconnected fittings (already connected). Disconnected the two halves. The male quick connect end of the wire will not be used and may be taped off. The female end will be connected to the RED/WHITE wire from

the 16160300 harness. Connect the other wires as shown. It is recommended that heat shrink tubing be put over these connections once complete to seal against corrosion.

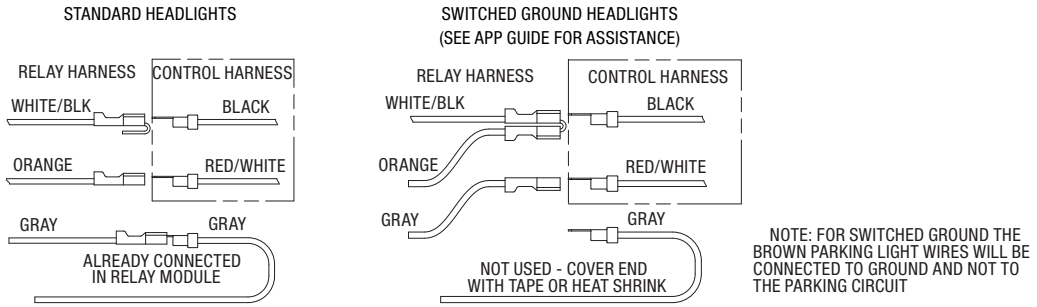

OPTION 1 – for semi-automatic light switching from plow to truck

5. Mount the toggle switch in a convenient location for the driver. Existing truck upfitter toggle switches may also be used (and the provided toggle switch will not be needed).

6. Connect the FUSED POWER LINE to the TOGGLE SWITCH.

7. Connect the 16160519 POWER WIRE to the TOGGLE SWITCH and an OEM approved +12V IGNITION source (10A)

Note: It does not matter which terminal on the toggle switch each wire is connected to.

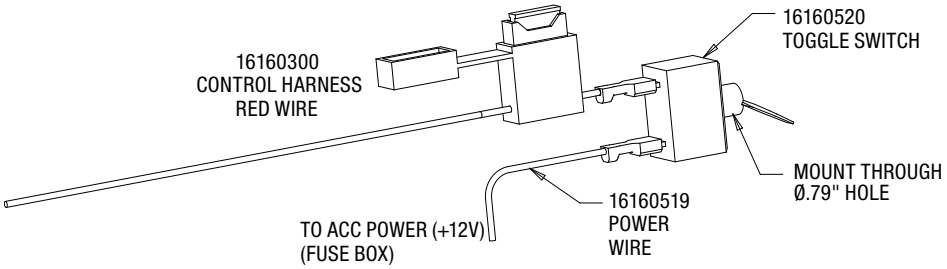

OPTION 1
CAB SWITCH WIRING

OPTION 2 – for automatic light switching from plow to truck

8. Connect the FUSED POWER LINE to an OEM approved +12V IGNITION source (10A)

Light Aiming

1. Place the vehicle on a level surface 25 feet in front of a matte-white screen, such as a white wall or garage door.

2. The snowplow should be mounted, with the blade raised in transport position.

3. Check that the truck is in normal operating condition with no flat tires, failed suspension components, and no passengers.

4. Mark the vertical centerline of the vehicle headlights on the screen (a line matching the height the of headlights from the ground). Mark the horizontal centerline of the vehicle headlights on the screen (lines matching the headlight center to center distance).

5. The high intensity zone of the low beams should be just below the horizontal line and the right of the vertical lines (see diagram below). Adjust the headlight aim as required.

NOTE: Snowplow installers must certify that installation conforms to federal motor vehicle safety standards.

Your plow and truck are now ready for operation. The hydraulic system has been filled at the factory and should be fully operational. It is possible that agitation due to the shipping has introduce some air into the oil. When operating the plow for the first time some oil may exit the vent (by the coils). This should stop once the plow is cycled and operational. *Check all plow and light functions. If something is not working correctly, reread the installation directions to make sure a step was not missed and check the schematics.*

Light Aiming Diagram

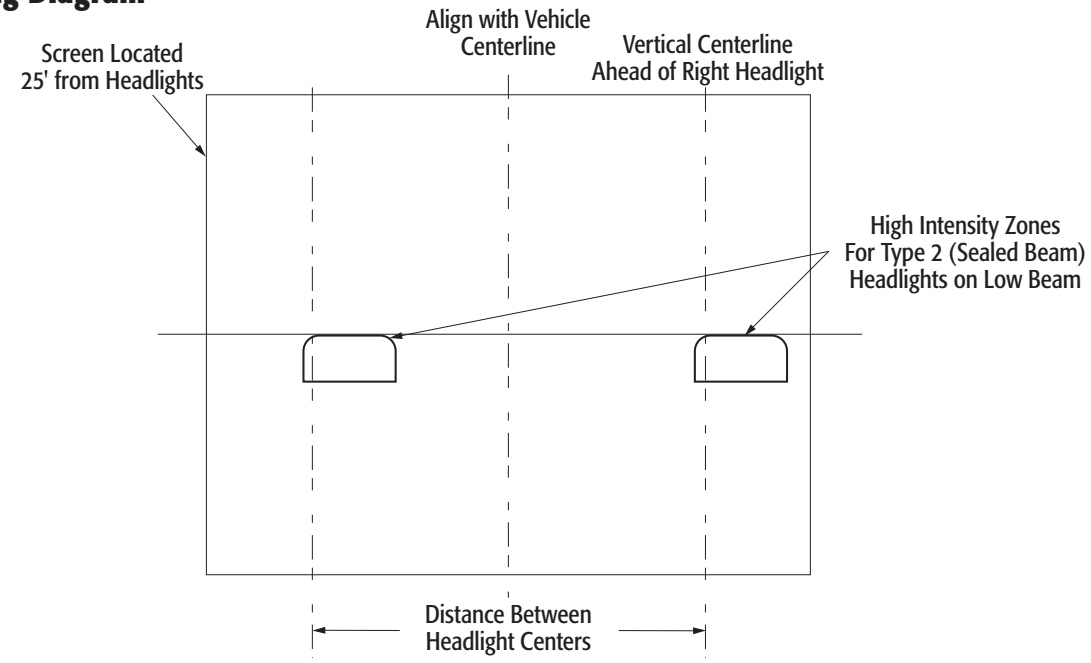

STORAGE

1. Before disconnection the plow from your vehicle, fully compress the lift cylinder
2. Disconnect the plow from your vehicle
3. Coat all electrical connection points with dielectric grease
4. Repair/touch up any chipped paint or rusted areas
5. Apply a coat of oil or grease to all exposed chrome (on angle and lift cylinders)
6. Grease all grease fittings on trip pins and king pin

REMOVAL FROM STORAGE

1. Check all fasteners and hydraulic fittings for tightness.
2. Replace any cracked hydraulic hoses
3. Coat all electrical connection points with dielectric grease
4. Connect plow to vehicle

MAINTENANCE

The SnowDogg line of plows has been simply designed for reliable service. In order to ensure the reliability of your plow, observe the following maintenance items and regularly inspect:

- Fasteners and retaining devices for proper installation and tightness.
- Hydraulic cylinders for damage, pitting or leakage
- Hydraulic hoses for wear, damage or leakage. Replace any damaged hose.
- All electrical connections for corrosion – apply dielectric grease as required
- Cutting edge wear
- Plow shoe wear
- Greasable fittings (2x trip pins and king pin)

With proper maintenance and care your SnowDogg plow will provide years of trouble free service!

Linkage Detail Diagram

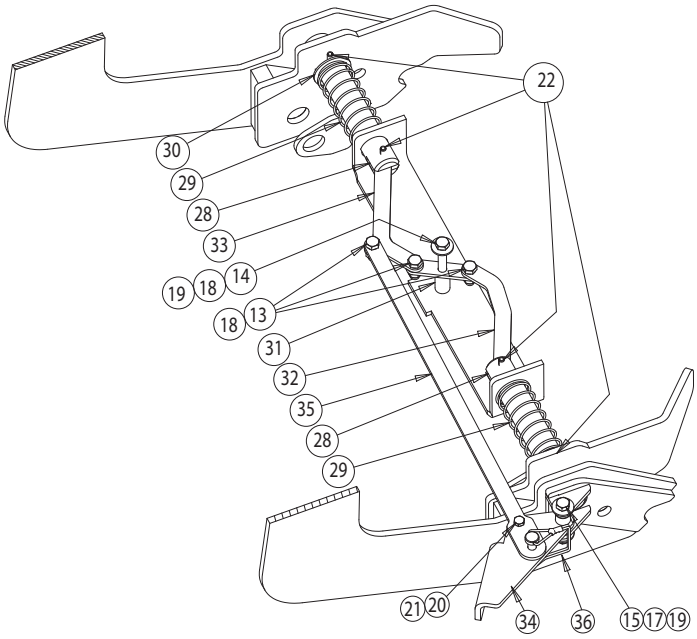

Lift Frame Diagram

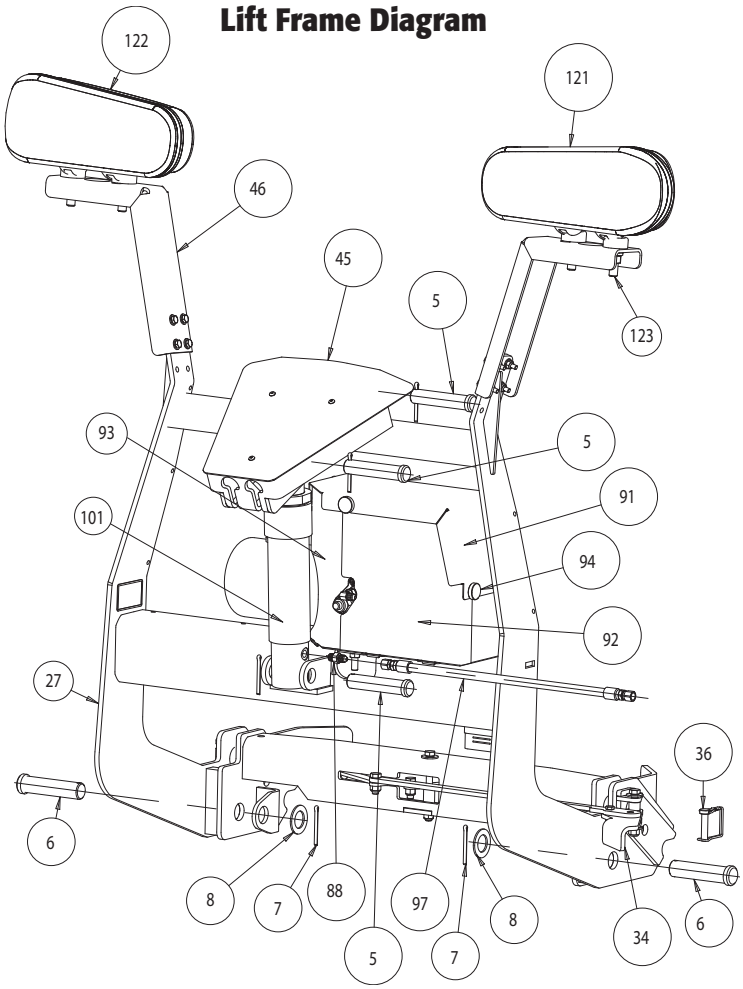

A-Frame Diagram

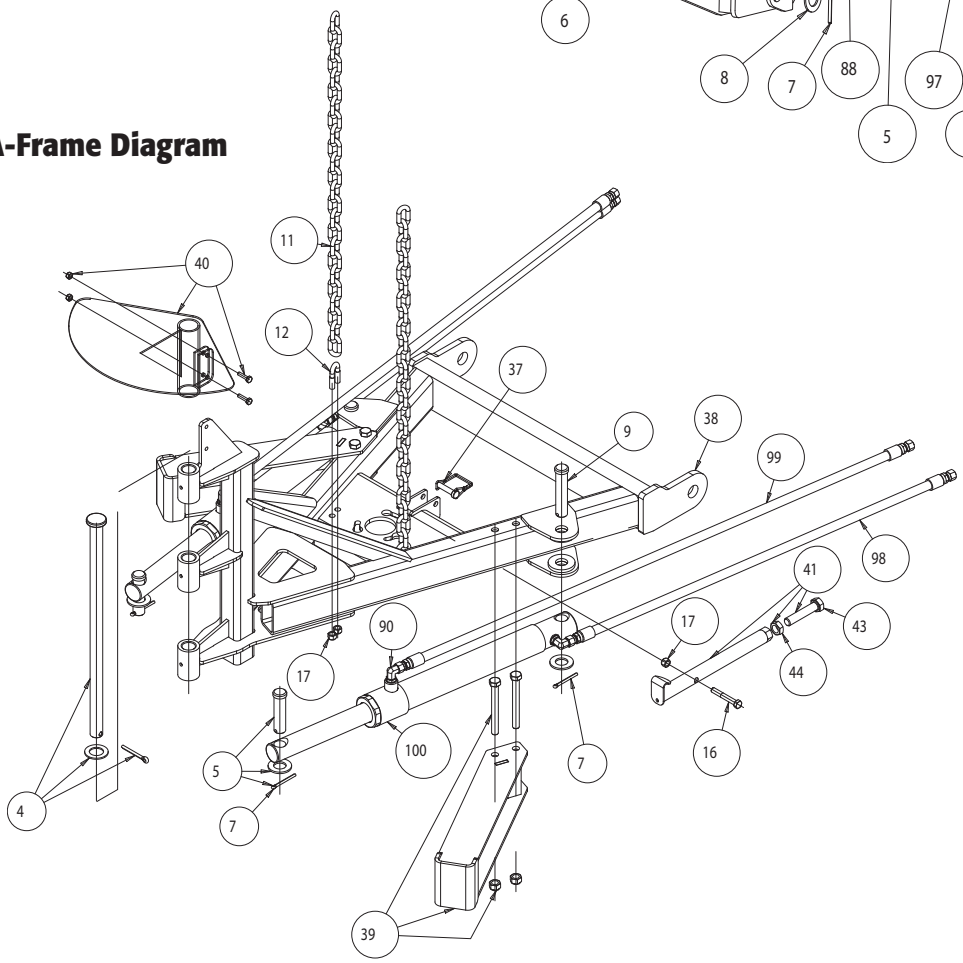

Moldboard Diagram

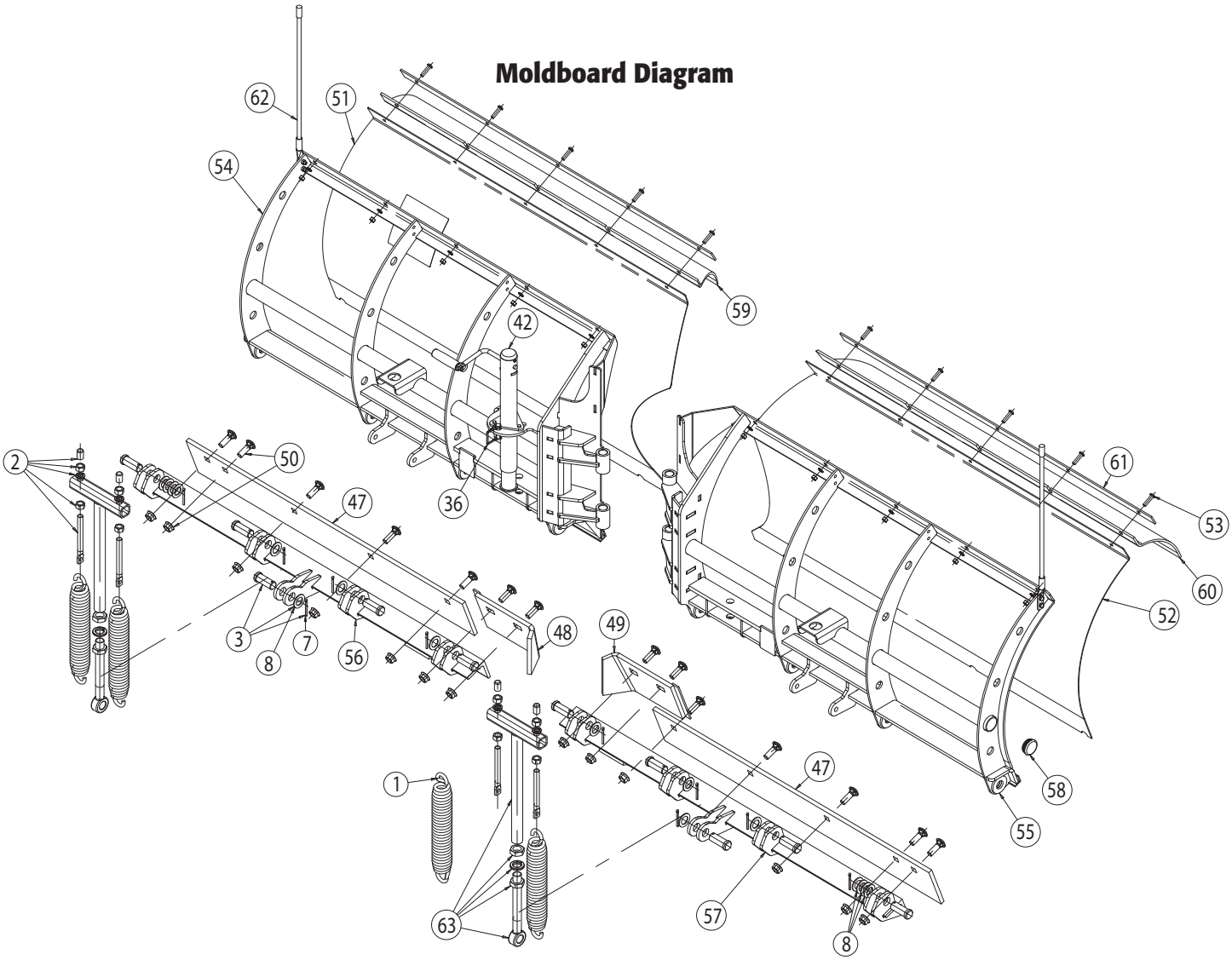

Harness Diagram

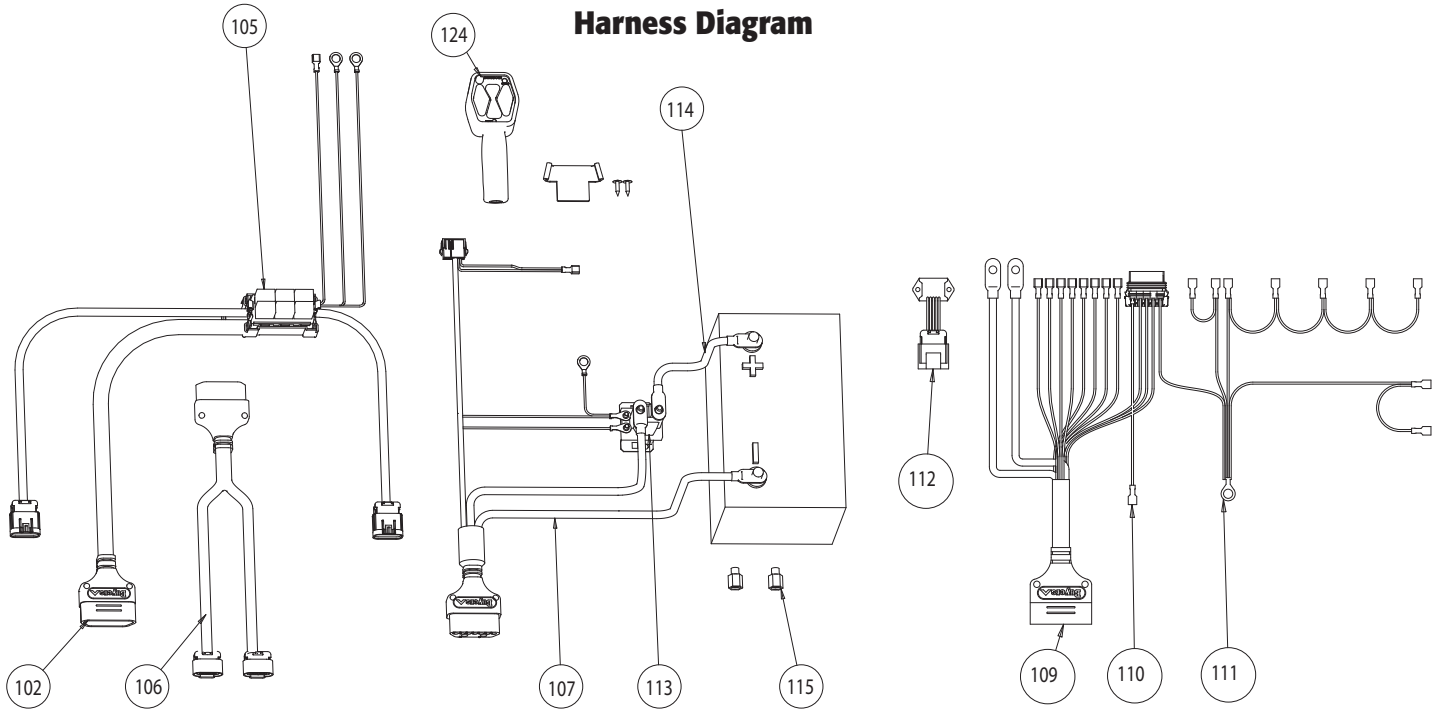

Hydraulic Power Unit Diagram

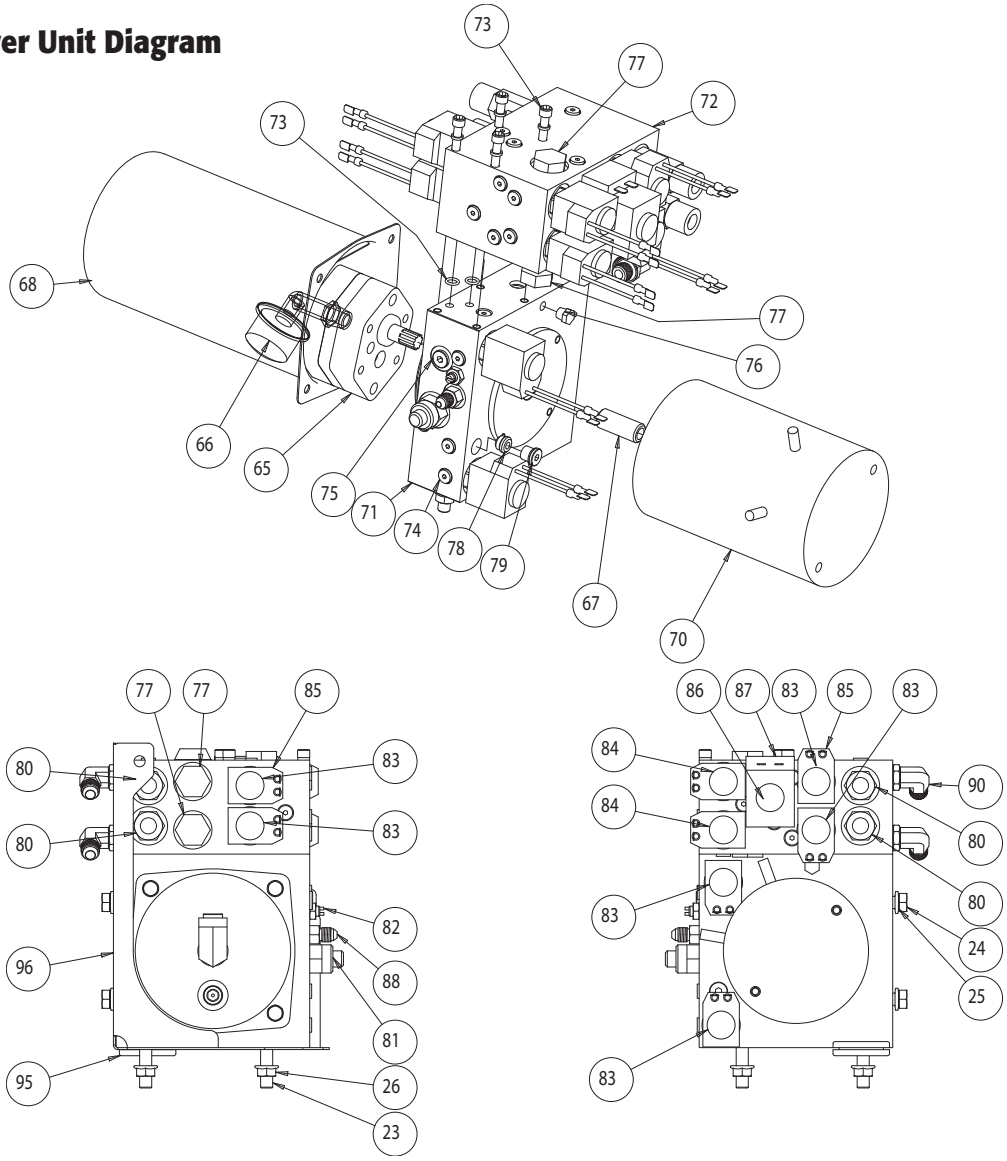

Hydraulic Power Unit Wiring Diagram

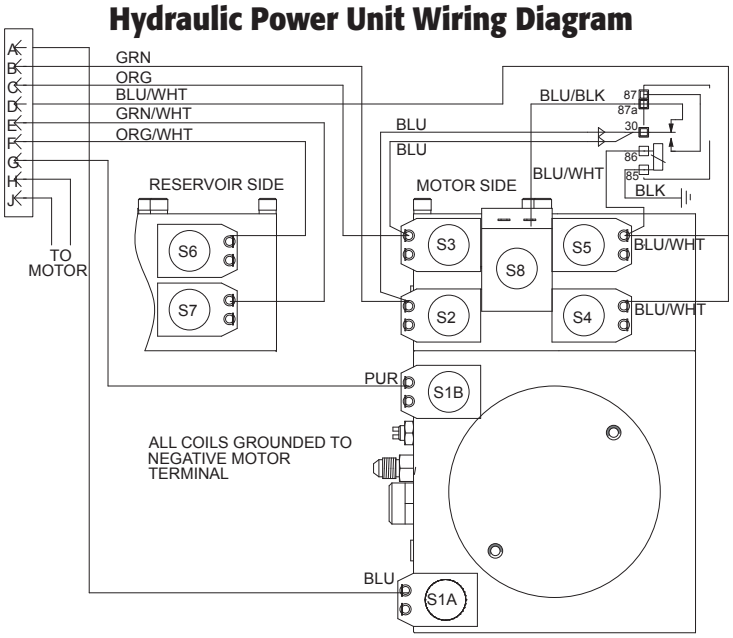

Parts List

ITEM	PART NO.	QTY.	DESCRIPTION
	1610		***FASTENERS / HARDWARE***
1	16101200	4	Trip Spring
2	16101210	1	Spring Mount Eye Bolt Kit (set of 4)
3	16102144	10	Clevis Pin Kit, Trip Angle
4	16101170	1	Hinge Pin Kit, VX
5	16102142	5	Clevis Pin Kit , 7/8" X 3-1/4" w/ HDW
6	16102100	2	Clevis Pin KIT, A-Frame to Lift Frame w/ HDW
7	16102102	19	Cotter Pin, 3/16"x2"
8	16102104	19	Washer
9	16102122	2	Clevis Pin Kit, 7/8" X 4" w/ HDW
11	16103000	2	Lift Chain
12	16103020	2	Lift Chain U-Bolt w/nuts
13	16101001	3	Screw, Cap, 3/8-16 x 1 SST
14	16101002	1	Screw, Cap, 3/8-16 x 4 SST
15	16101003	1	Screw, Cap, 3/8-16 x 2-1/2 ZN
16	16101004	1	Screw, Cap, 3/8-16 x 2 ZN
17	16101005	5	Nut, Nylock 3/8-16 ZN
18	16101006	5	Nut, Nylock 3/8-16 SST
19	16101007	4	Washer, Flat, 3/8, SST
20	16101008	1	Screw, Cap, 1/4-20 x 1 SST
21	16101009	1	Nut, Nylock, 1/4-20 SST
22	16111118	4	Roll Pin, 1/4 x 2
23	16101016	2	Stud, 3/8-16 X 2, ZN
24	16101017	2	Screw, Cap, 3/8-16 x 3/4, ZN
25	16101018	2	Washer, Lock, 3/8, ZN
26	16101019	2	Nut, Serrated Flange, 3/8-16, ZN
	1611		***LIFT FRAME PARTS***
27	16111100	1	Lift Frame Weldment
28	16111102	2	Mount Locking Pin
29	16111104	2	Spring, Mount Locking Pin
30	16111116	2	Washer, Flat
31	16111106	1	Linkage, Center
32	16111108	1	Linkage Plate, DS
33	16111110	1	Linkage Plate, PS
34	16111112	1	Foot Pedal
35	16111114	1	Pedal Linkage
36	16111120	2	Snapper Pin, Pedal Lock
37	16111124	1	Snapper Pin, Prop Stand Lock
38	16113200	1	A-Frame Weldment, VX
39	16113210	2	Angle Stop Assembly, w/ hardware
40	16113260	1	Cover Kit, VX Moldboard Hinge
41	16111210	1	Prop Stand Assy. (with lift bolt/nut)
42	16111310	1	Jack, A-frame
43	16111212	1	Lift Bolt, Stand
44	16111214	1	Jam Nut, 5/8-11
45	16111400	1	Chain Lift Arm (assembled)
	16111402	1	Stainless Cover only, w/screws
	16111406	1	Kit, screws
46	16111510	2	Light Bracket w/fasteners
	1612		***MOLDBOARD PARTS***
47	16120820	2	40"x1/2" Cutting Edge (VX85)
	16120830	2	46"x1/2" Cutting Edge (VX95)
48	16120840	1	DS Center Cutting Edge (VX)
49	16120850	1	PS Center Cutting Edge (VX)
50	16120114	1	Cutting Edge Fastener Kit (set of 10)
51	16121720	1	Skin, DS, VX85, SST
	16121730	1	Skin, DS, VX95, SST
52	16121722	1	Skin, PS, VX85, SST
	16121732	1	Skin, PS, VX95, SST
53	16120110	1	Skin Fastener Kit (set of 10)
54	16122200	1	Moldboard Weldment, DS (VX85)
	16122210	1	Moldboard Weldment, DS (VX95)
55	16122202	1	Moldboard Weldment, PS (VX85)
	16122212	1	Moldboard Weldment, PS (VX95)
56	16122230	1	Trip Angle Weldment, DS (VX85)
	16122240	1	Trip Angle Weldment, DS (VX95)
57	16122232	1	Trip Angle Weldment, PS (VX85)
	16122242	1	Trip Angle Weldment, PS (VX95)
58	16120120	2	Crosstube End Cap
59	16120170	1	Deflector, DS VX85
	16120176	1	Deflector, DS VX95

ITEM	PART NO.	QTY.	DESCRIPTION
60	16120172	1	Deflector, PS VX85
	16120178	1	Deflector, PS VX95
61	16120270	2	Clamp Strip, Deflector (VX85)
	16120272	2	Clamp Strip, Deflector (VX95)
62	16122100	1	Blade Guide Assembly (pr)
63	16120190	2	T-bar Kit, Trip Spring
	1615		***HYDRAULIC COMPONENTS***
	16152000	1	HV600 Power Unit Asm
65	16151100	1	Pump HV/HT
66	16151102	1	Inlet Strainer Kit
67	16152004	1	Spline Coupler, HV600
68	16151110	1	Reservoir Kit (Res/Bolts/Seal/Cap)
	16151112	3	Reservoir Plug
70	16151200	1	Motor, HV/HT
71	16152010	1	Center Manifold (no valves/with plugs)
72	16152012	1	Auxiliary Manifold (no valves/with plugs)
73	16152104	1	Manifold O-ring/Fastener Kit
74	16152016	28	Plug, -2 SAE, (1/8")
75	16152018	1	Plug, -4 SAE, (1/4")
76	16151326	1	Vent port
77	16152330	4	Valve, Check
78	16151308	1	Lift Check Valve (Insert)
79	16152332	1	Plug, Lift Check Valve
80	16152334	4	Angle Relief Valve, 3000 PSI
81	16151302	1	Main Relief Valve, 1900 PSI
82	16151310	1	Lowering Quill
83	16151312	6	S1A/S1B/S4/S5/S6/S7 Valve
84	16151314	2	S2/S3 Valve
85	16152336	8	Coil, S1-S7, w/flying leads
86	16152340	1	S8 Valve
87	16152342	1	Coil, S8, Dual Spade
88	16151325	2	Lift Port/Cylinder Fitting
	16152344	1	Lift Port 90° Fitting
90	16152346	8	Angle Port/Cyl 90° Fitting
91	16152120	1	Cover, Top, HV600 HPU
92	16152122	1	Cover, DS Front, HV600 HPU
93	16152124	1	Cover, PS Front, HV600 HPU
94	16152126	3	Screw, Thumb, HPU Cover
	16152128	1	Grommet, HPU Tray
	16152130	1	HPU Tray, HV
97	16153100	1	Lift Hose (1/4"x18")
98	16153110	2	Angle Hose (3/8"x36")
99	16153120	2	Hose, Angle Cylinder Retract (3/8" x 48")
100	16154300	2	Angle Cylinder D.A. (1-1/2"x12")
101	16154200	1	Lift Cylinder (2"x6")
1616		***ELECTRICAL***	
102	16160100	1	Relay Harness
	16160110	1	Relay Harness Repair Connector
	16160112	2	Relay Harness Headlight Connector Kit
105	16160114	6	Relay
106	16160200	1	Light Harness
107	16160300	1	Control Harness
	16160310	1	Control Harness Repair Connector
109	16161400	1	Plow Harness, HV600
110	16161430	1	Plow Harness, S8 only, HV600
111	16161420	1	Ground Harness, HV600
112	16160448	1	Relay Module, HV600
113	16160410	1	Motor Relay
114	16160500	1	Battery Cable
115	BA1	2	Battery Adapter
	16160510	2	Connector Cap (Plow & Relay Harness)
	16160512	2	Connector Cap (Light & Control Harness)
	16160700	1	Plow, Light Kit
121	16160710	1	DS Plow Light
122	16160720	1	PS Plow Light
123	16160730	2	Hardware Kit, Plow Light (for one light)
124	16161600	1	Controller, Hand Held, VX Plows

Troubleshooting

Symptom	Check	Result	Fix
Pump motor not running when UP, LEFT or RIGHT pressed	Check voltage at MOTOR terminals with UP, LEFT, or RIGHT buttons pressed	If voltage present - MOTOR is bad	Replace MOTOR
	Check cable continuity between MOTOR RELAY and MOTOR	If no continuity, check cable, connections, and replace if necessary	Replace/repair cable or connections
	Check control signal to MOTOR RELAY (small wires to motor relay) with UP, LEFT, or RIGHT buttons pressed	If voltage present and no click is heard when buttons are pressed, MOTOR RELAY is bad	Replace MOTOR RELAY
	Check ground continuity between between control ground at MOTOR RELAY and battery ground	If no continuity, check cable, connections, and replace if necessary	Replace/repair cable or connections
Plow won't move at all, moves "jerkily", very slowly, or chatters	Check fluid level in reservoir	Fluid should be visible from fill cap - reservoir should be ~3/4 full	Add fluid
	Air in fluid	Bleed air from system	Slightly loosen fittings to angle cylinders and move the plow wings. Tighten fittings while fluid is escaping. Do this over an absorbent mat, or hold a rag over fitting to absorb excess fluid.
Oil is leaking from cylinders		Packing is loose	Tighten gland until leak stops
		Rods are pitted	Polish rods with fine steel wool
			Replace cylinder
Oil sprays out of vent port in power unit	Air in Fluid	Bleed air from system	Slightly loosen fittings to angle cylinders and angle the plow. Tighten fittings while fluid is escaping. Do this over an absorbent mat, or hold a rag over fitting to absorb excess fluid.
	Check fluid level	Fluid should be visible from fill cap - reservoir should be ~3/4 full	Remove fluid if necessary - in most cases the problem will subside as entrapped air dissipates.
Plow won't drop	Check voltage at S1B VALVE coil	If no voltage present, check cable and connections	Replace/repair cable or connections
			Confirm PURPLE wire at S1B VALVE
	Check DROP SPEED control valve	DROP SPEED valve should be several turns from fully closed	Open DROP SPEED valve
	Check S1B VALVE for contamination	Poppet must move freely, and seat area must be clear of any debris	Remove S1B VALVE and check free movement of poppet, clean any chips/debris from poppet seat
			Replace S1B VALVE
	Check LIFT LOCK valve for contamination	Poppet must move freely, and seat area must be clear of any debris	Remove LIFT LOCK valve and check free movement of poppet, clean any chips/debris from poppet seat
			Replace LIFT LOCK valve

Plow won't lift	Check voltage at S1A VALVE coil	If no voltage present, check cable and connections	Replace/repair cable or connections
			Confirm BLUE wire at S1A VALVE
	Check S1A VALVE for contamination	Poppet must move freely, and seat area must be clear of any debris	Remove S1A VALVE and check free movement of poppet, clean any chips/debris from valve
			Replace S1A VALVE
Left or Right Wing won't extend	Check voltage at S4 (LEFT) or S5 (RIGHT) VALVE coil	If no voltage present, check cable and connections	Replace/repair cable or connections
			Confirm ORANGE wire at SC VALVE
	Check S4/S5 VALVE for contamination	Poppet must move freely, and seat area must be clear of any debris	Remove S4/S5 VALVE and check free movement of spool, clean any chips/debris from valve
			Replace S4/S5 VALVE
Left or Right Wing won't retract	Check voltage at S6 (LEFT) or S7 (RIGHT) VALVE coil	If no voltage present, check cable and connections	Replace/repair cable or connections
			Confirm ORG/WHT wire at S6 and GRN/WHT wire at S7
	Check S6/S7 VALVE for contamination	Poppet must move freely, and seat area must be clear of any debris	Remove S6/S7 VALVE and check free movement of spool, clean any chips/debris from valve
			Replace S6/S7 VALVE
"Angle Left" and "Angle Right" don't work	Check voltage at S8 VALVE coil	If no voltage present, check cable and connections	Replace/repair cable or connections
			Confirm BLUE/BLK wire at S8 VALVE
	Check S8 VALVE for contamination	Poppet must move freely, and seat area must be clear of any debris	Remove S8 VALVE and check free movement of spool, clean any chips/debris from valve
			Replace S8 VALVE
Plow drifts while plowing snow	Air in Fluid	Bleed air from system	Slightly loosen fittings to angle cylinders and angle the plow. Tighten fittings while fluid is escaping. Do this over an absorbent mat, or hold a rag over fitting to absorb excess fluid.
	Check CHECK VALVES for contamination	Poppet must move freely, and seat and piston area must be clear of any debris	Remove CHECK valves and clean
			Replace CHECK valve
	Check CROSS RELIEF valves for contamination	Poppet must move freely, and seat must be clear of any debris	Remove CROSS RELIEFS valve and clean
			Replace CROSS RELIEF valve

Plowing Tips

- Know the area you are plowing. Be aware of all hidden obstacles (pipes, drains, berms, etc.)
- Plow with the storm, do not let snow accumulate
- Always lower the plow blade when parking to minimize the risk of the plow dropping and to reduce the load on the truck suspension.
- When transporting the plow – monitor coolant temperature. If the truck is running hot, adjust the plow position to allow additional airflow to the radiator.
- Plowing at high speeds increases the potential for damage to your plow AND your truck.