302D-B/305D-B
Bottom Dump Semitrailer
Parts Manual

LANDOLL CORPORATION
1900 North Street
Marysville, Kansas 66508
(785) 562-5381
800-428-5655 ~ WWW.LANDOLL.COM

Manuals for the Bottom Dump Trailer	
MANUAL NUMBER	**MANUAL NAME**
F-1043-0519	Bottom Dump Parts Manual

Table of Contents

1 Illustrated Parts List

Instructions for Ordering Parts **1-1**

Decals **1-2**
Decal Arrangement 1-2

Frame **1-5**
General Frame Assembly 1-5

Electric **1-7**
Electrical Components 1-7

Fifth Wheel **1-14**
Rocking Plate 1-14

Air **1-16**
60-Gallon Air Gate 1-16

Air Brakes **1-18**
Tandem & Triple Axle Air Brakes 1-18
16-1/2 x 7 Brakes 1-22
Outboard Pilot Mount Hub and Drum Assembly 1-24

Grease **1-26**
Tandem Axle Grease System 1-26
Triple Axle Grease System 1-28

Suspension **1-30**
Spring Ride w/ Meritor Tire Inflation 1-30

Mud Flap **1-33**
Mud Flap Assembly 1-33

Legs **1-34**
Gate Mounted Pin-Drop Legs 1-34

Options **1-35**
Tarp 1-35

Instructions for Ordering Parts

**** Repair parts must be ordered through an Authorized Dealer ****

DEALER INSTRUCTIONS FOR ORDERING PARTS FROM LANDOLL PARTS DISTRIBUTION CENTER

Phone #: 800-423-4320 or 785-562-5381 **Fax #: 888-527-3909**
Order online: dealer.landoll.com

IDENTIFICATION PLATE

See Figure 1-1 for the identification plate, which list the rated capacity, serial number, and other vehicle characteristics. It is located on the left side of the trailer near the glad hand.

SERIAL NUMBER NOMENCLATURE

The serial number for the Bottom Dump Trailer is located on the identification plate.

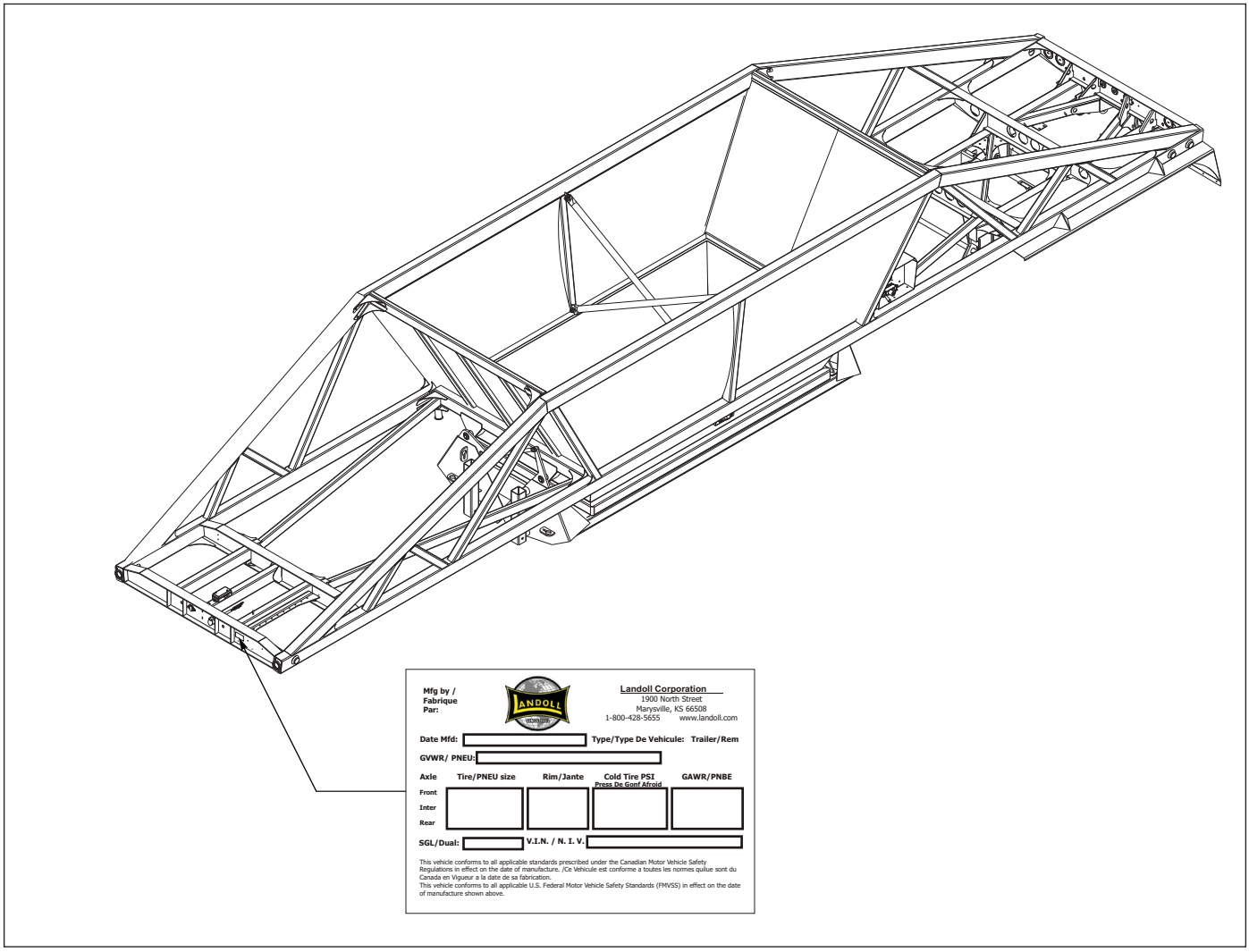

Figure 1-1: Identification Plate Location

Decals

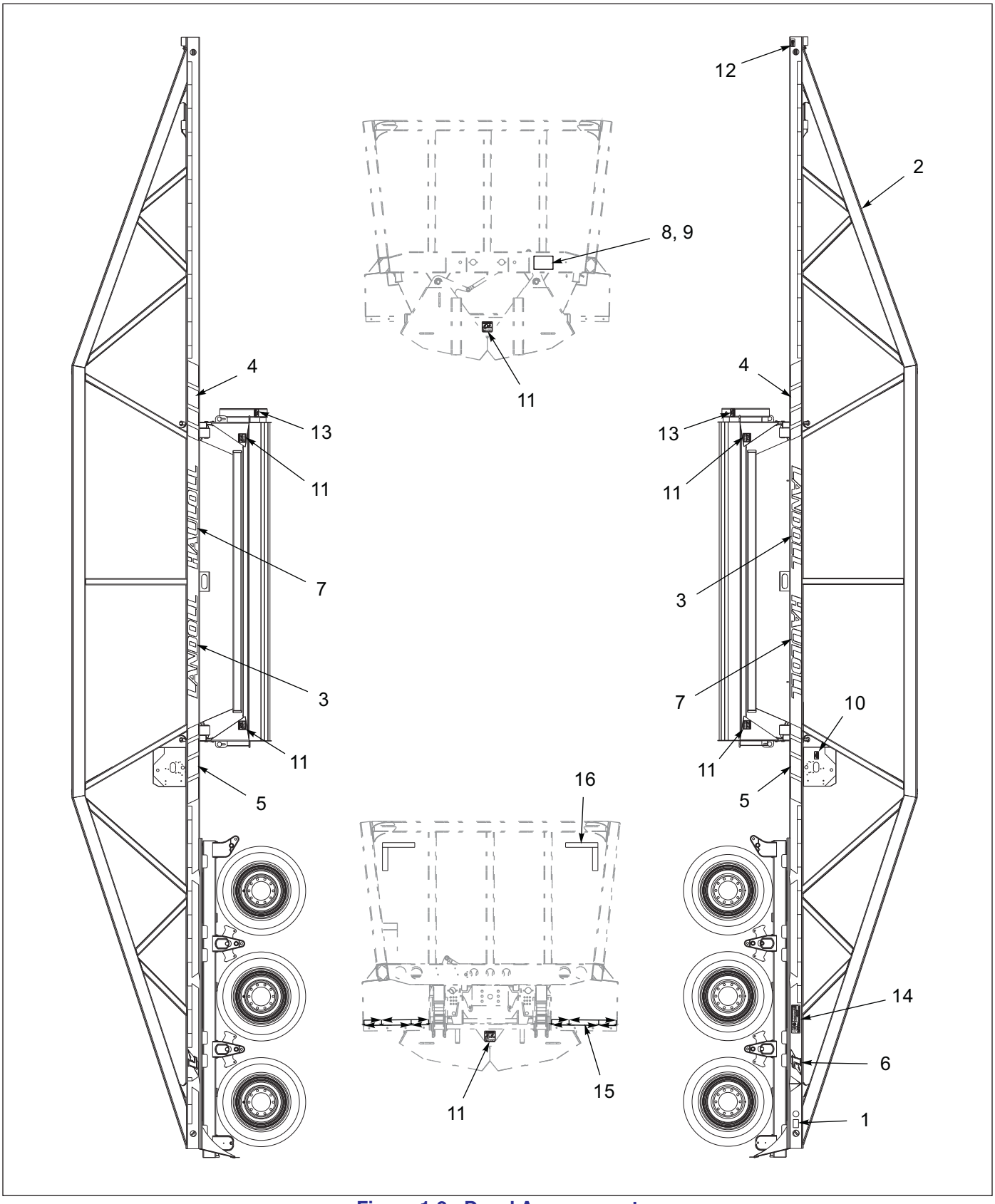

Figure 1-2: Decal Arrangement

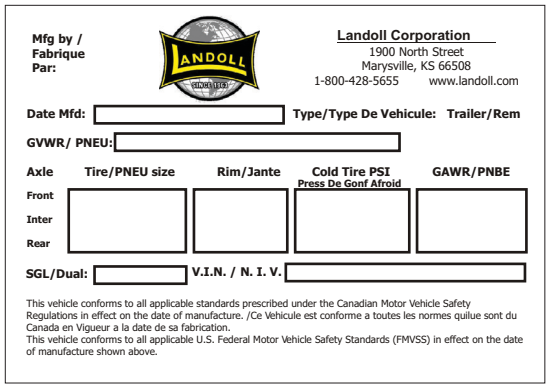

8

3

7

11

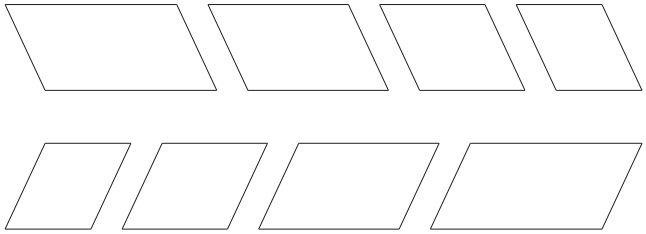

4

5

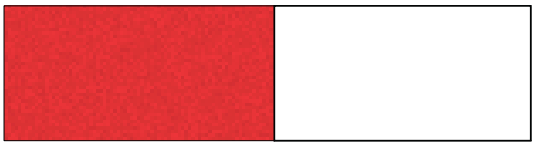

15

6

13

12

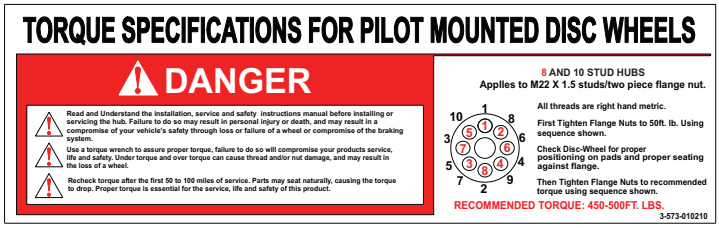

14

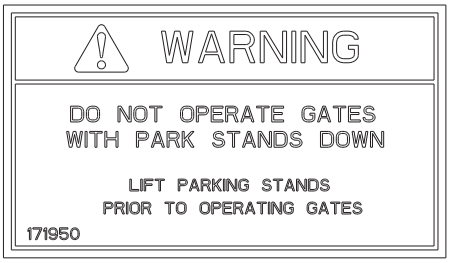

10

Figure 1-3: Decals

Decal Arrangement

ITEM	PART NUMBER	DESCRIPTION	QTY.
1	101855	WARNING LAMP LABEL,ABS	1
2	122788	FRAME WLDMT 305-43 SPG	REF
3	153750	DECAL, LANDOLL 5" REFLECT	2
4	153752	DECAL, CHEVRON LEFT REFLECT	2
5	153753	DECAL, CHEVRON RIGHT REFLECT	2
6	153797	DECAL,HIGHWAY L 5" REFLECTIVE	2
7	155178	DECAL, HAULOLL 5" REFLECTIVE	2
8	155780	TRAILER VIN PLATE B	1
9	156010	RIVET, BLIND .156X1/2 GRIP	4
10	171950	DECAL GATES / PARK STANDS	1
11	2-573-010335	DECAL, DANGER PINCHING	6
12	3-573-010060	DECAL, TOLL-FREE NO	1
13	3-573-010111	DECAL SPARTAN PARK STANDS	2
14	3-573-010210	DECAL TORQUE SPEC 8-10STU HUB	1
15	3-573-010377	DECAL,2"REFLEXITE TAPE,RD/WHT	REF
16	3-573-010378	DECAL,2"REFLEXITE TAPE,WHITE	REF

Table provided for general use.

NOTES:

Frame

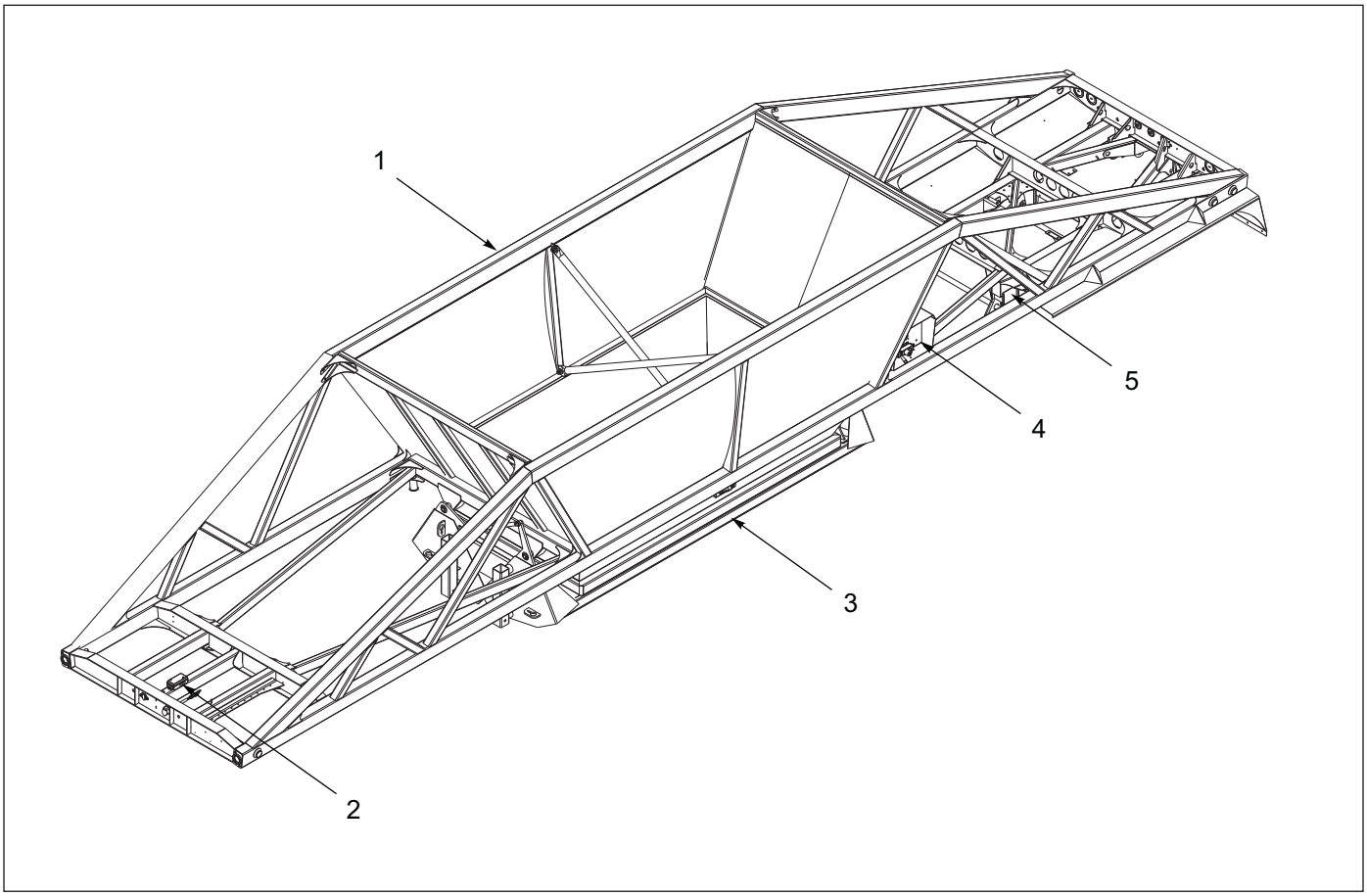

Figure 1-4: General Frame Assembly

General Frame Assembly

ITEM	PART NUMBER	DESCRIPTION	QTY.
1	-----	FRAME ASSEMBLY	REF
2	-----	FRONT JUNCTION BOX ASSEMBLY	REF
3	-----	HOPPER ASSEMBLY	REF
4	-----	REAR JUNCTION BOX ASSEMBLY	REF
5	-----	SUSPENSION ASSEMBLY	REF

Table provided for general use.

NOTES:

Electric

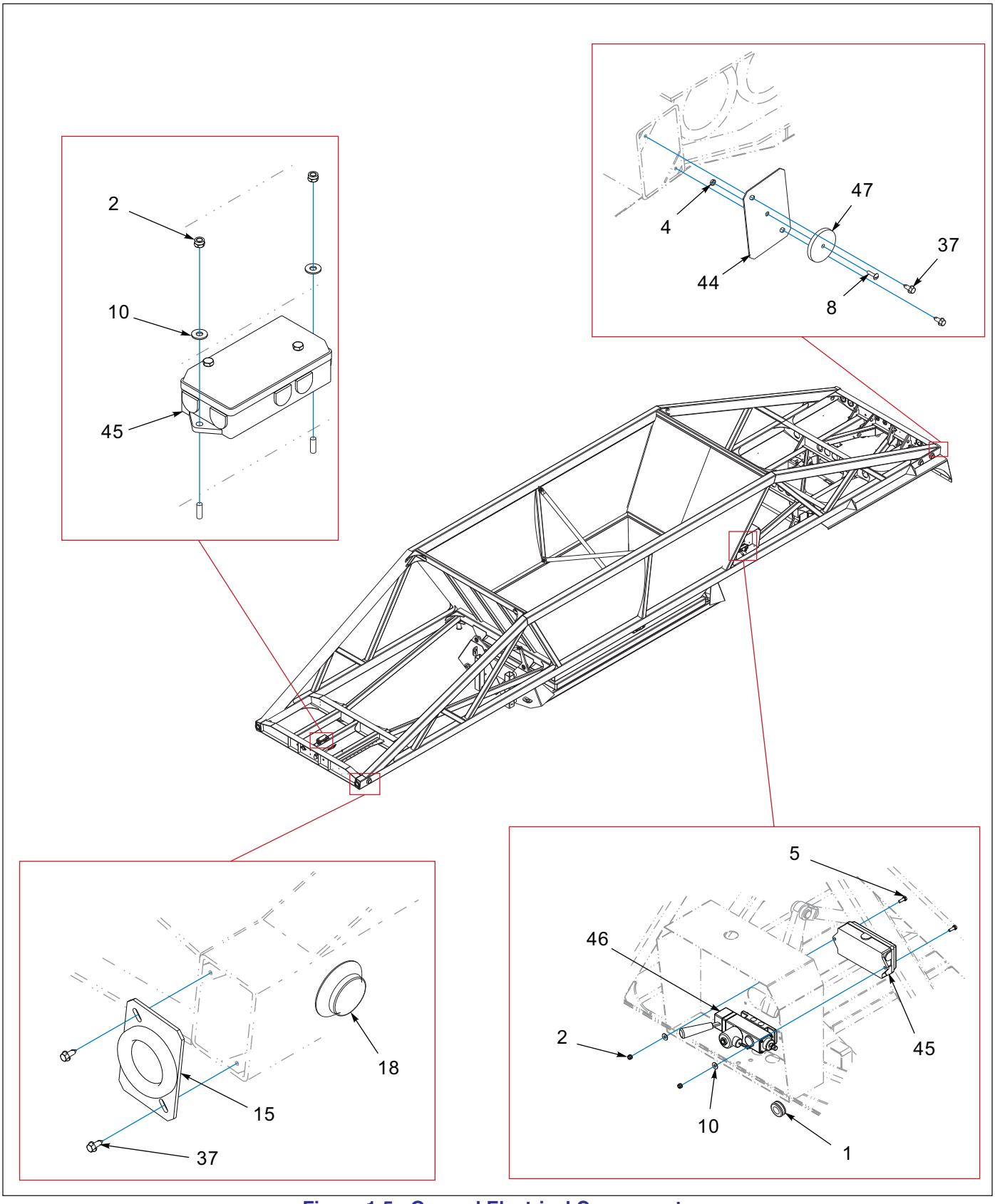

Figure 1-5: General Electrical Components

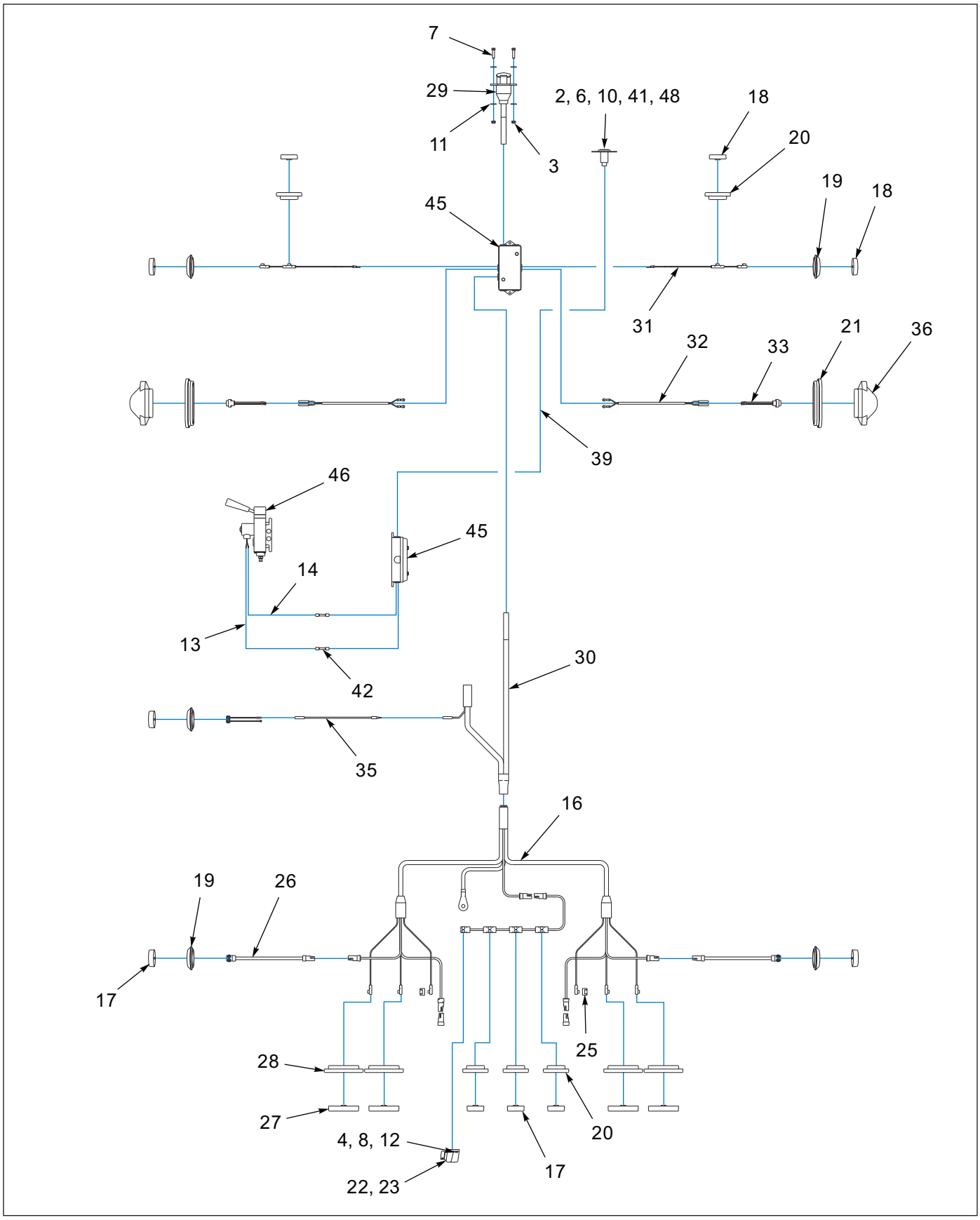

Figure 1-6: Lighting and Harnesses

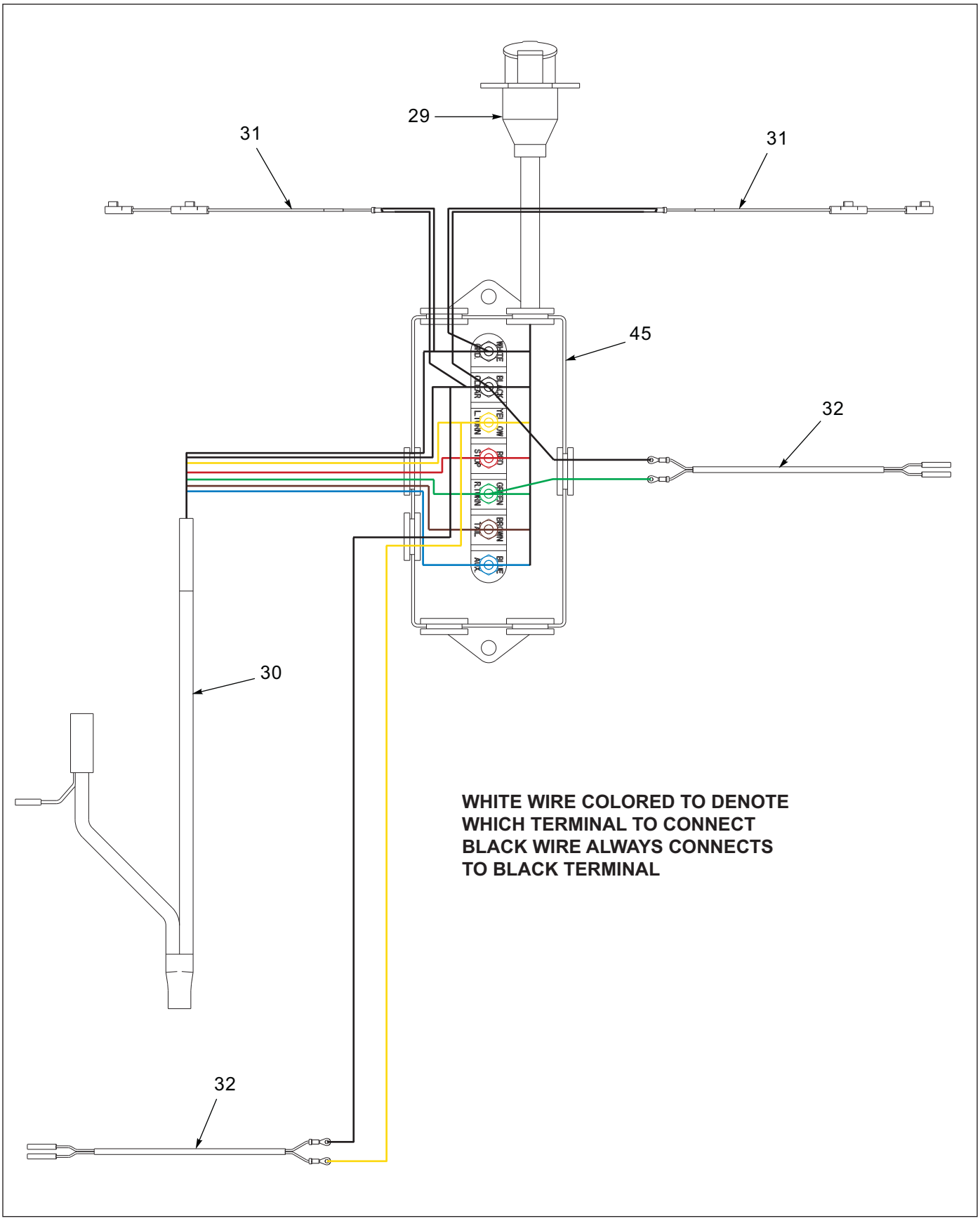

Figure 1-7: Front Junction Box

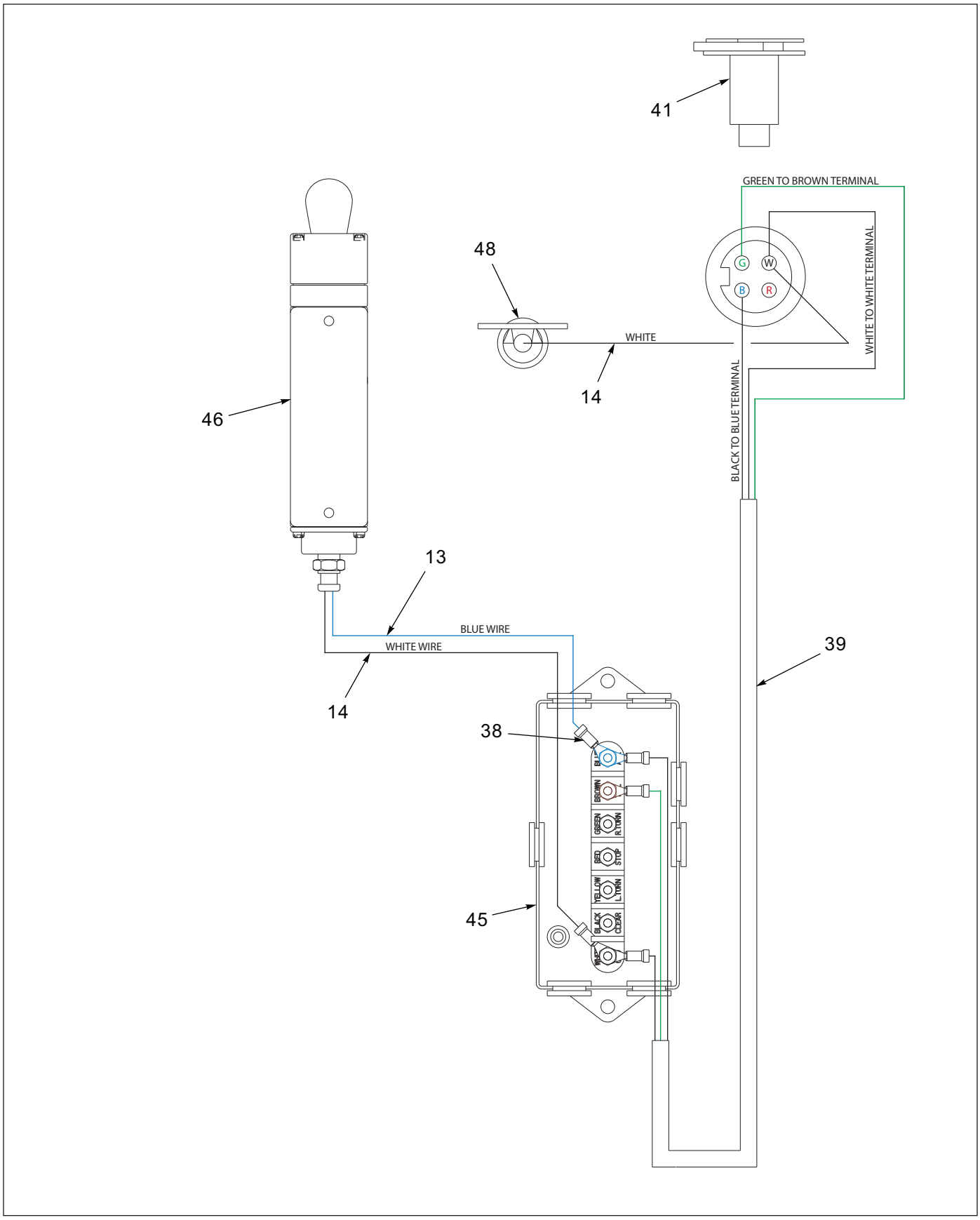

Figure 1-8: Rear Junction Box

Electrical Components

ITEM	PART NUMBER	DESCRIPTION	QTY.
1	1-343-010006	GROMMET	1
2	1-512-010005-01	NUT,HEX,SLFLKG GRB 1/4-20	6
3	1-512-010005-03	NUT HEX SLFLKG GRB 5/16-18	2
4	1-512-010007-03	NUT, HEX 10-24 GR2 ZP	2
5	1-654-010047-04	SCREW,HEX CAP,1/4-20X3/4 GR5	2
6	1-654-010047-06	SCREW,HX CP 1/4-20UNCX1 GR5	2
7	1-654-010049-06	SCREW,H/CAP,5/16-18UNCX1-1/4	2
8	1-656-010003051	SCREW,RH HD MACH 10-24X3/4	2
9	1-796-010003-02	TIE, STRAP, PLASTIC .18X14.0	4
10	1-861-010032-07	WASHER,FLAT 1/4 ZP	8
11	1-861-010032-09	WASHER, FLAT 5/16 W ZP/CD	4
12	1-861-010034-07	WASHER,LKG,HLCL SPR, NO 10	2
13	1-879-010008	WIRE, BLUE 14AWG	2
14	1-879-010010	WIRE, RED 14AWG	3
15	108739	PLATE,WN CA WEAR U/D930	REF
16	143104	HARNESS BUMPER GROTE	1
17	143108	LIGHT RED LED 2.5CL/MK GROTE	5
18	143109	LIGHT YEL LED 2.5 CL/MK GROTE	4
19	143110	GROMMET 2.5 SURFACE MT	5
20	143111	GROMMET 2.5 RECESSED MT GROTE	5
21	143114	GROMMET OVAL GROTE	2
22	143117	LIGHT CLEAR LED LICENSE GROTE	1
23	143118	BRACKET LIGHT LICENSE GROTE	1
24	143119	LIGHT YEL LED ABS GROTE	1
25	144608	DUMMY PLUG FOR FEMALE PLUG	2
26	144609	MARKER LAMP PIGTAIL HARNESS	2
27	144679	LIGHT RED LED 4IN S/T/T GROTE	4
28	144680	GROMMET 4IN ROUND GROTE	4
29	147231	HARNESS 7 WAY RECP GROTE MOD	1
30	147232	HARNESS MAIN W/ABS GROTE MOD	1
31	147233	HARNESS FRT MKR GROTE MOD	2
32	147234	HARNESS MID TURN GROTE MOD	2
33	147237	ADAPTER MID TURN GROTE	2
34	147238	ADAPTER ABS GROTE	1
35	147239	HARNESS JUMPER ABS GROTE	1
36	169410	LIGHT YEL MID TURN GROTE	2
37	-----	1/4-20 SELF TAPPING SCREW	REF
38	239-3646-4	TERMINAL,16-14AWG,#10,RING	5
39	3-156-010007	CABLE 14-3 SO THREE CONDUCTOR	40
40	3-201-010001036	CONDUIT PLASTIC FLEX 5/16X3FT	1
41	3-272-010003	CONNECTOR ELECT 4 POLE FM	1
42	3-272-010021	ELECT BUTT SPLICE 16-14 W/SEA	11
43	43029	HOSE WRAP AEROQUIP 1/4	3
44	583-159	COVER	REF
45	750-029	JUNCTION BOX 7 STUD	2
46	758-014	VALVE AIR CONTROL	REF
47	B477R	REFLECTOR PM RED	REF
48	-----	14AWG TO 1/4 RING TERMINAL	1

Table provided for general use.

NOTES:

Fifth Wheel

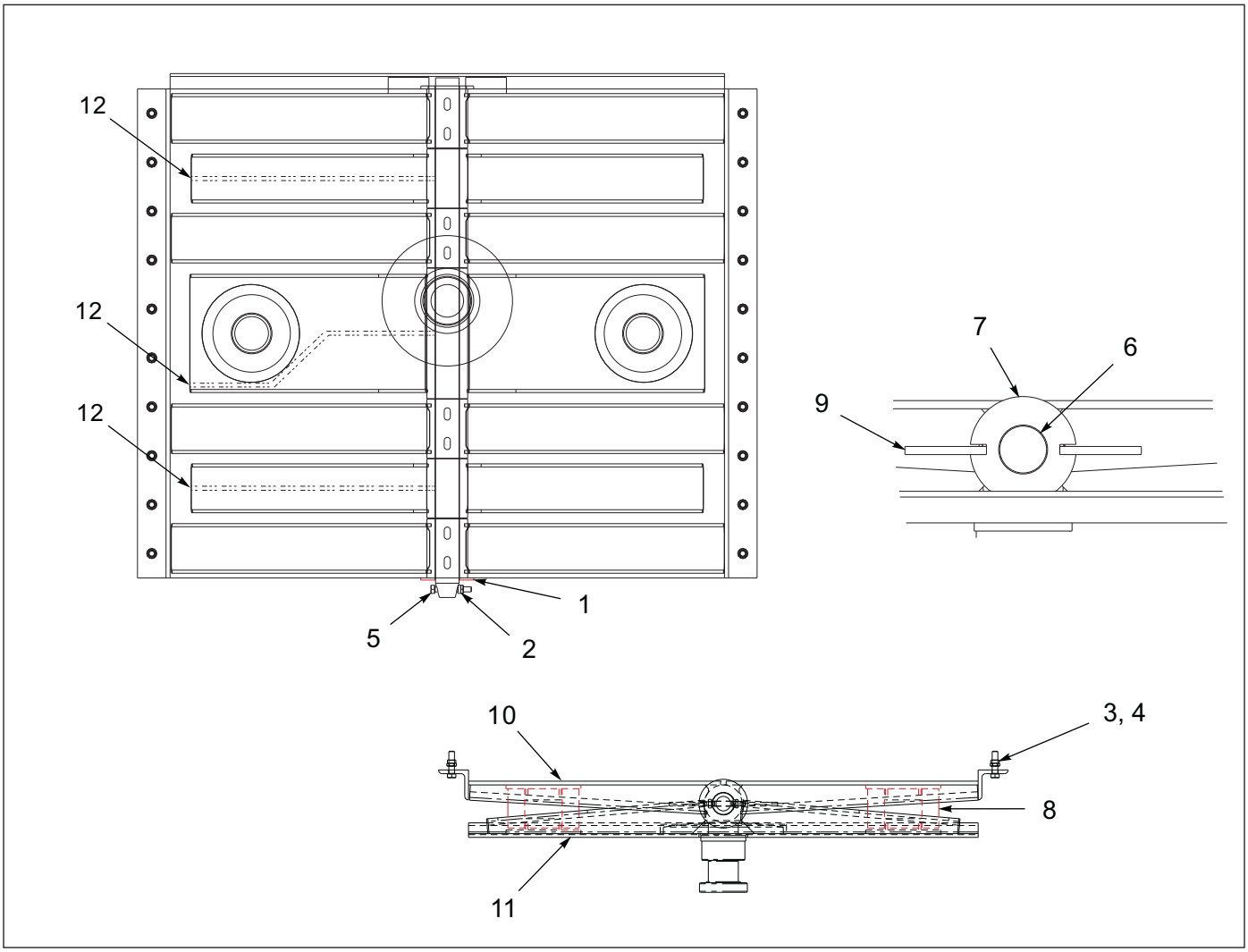

Figure 1-9: Rocking Plate

Rocking Plate

ITEM	PART NUMBER	DESCRIPTION	QTY.
1	-----	1-3/8 FLAT WASHER	1
2	1-512-010005-03	NUT, HEX, SLFLKG, 5/16-18 UNC, GRB	1
3	1-512-010005-05	NUT, HEX, SLFLKG, 3/8-16 UNC, GRB	20
4	1-654-010051-07	SCREW, HEX, 3/8-16UNCX1-1/2 GR5	20
5	108628	SCREW, HEX HEAD, 5/16-18X2-1/4 GR5	1
6	503-011	PIVOT SHAFT	1
7	503-012	BACKING WASHER-PIVOT SHAFT	1
8	503-022	BUSHING, RUBBER	2
9	-----	1/4X1X2-1/2 FLAT PLATE	2
10	S-003-015	ROCKING COUPLER WLDMT, UPPER	1
11	S-003-018	ROCKING COUPLER WLDMT, LOWER	1
12	110-0759	LUBE FITTING, 1/8NPTX11/16LG	3

Table provided for general use.

NOTES:

Air

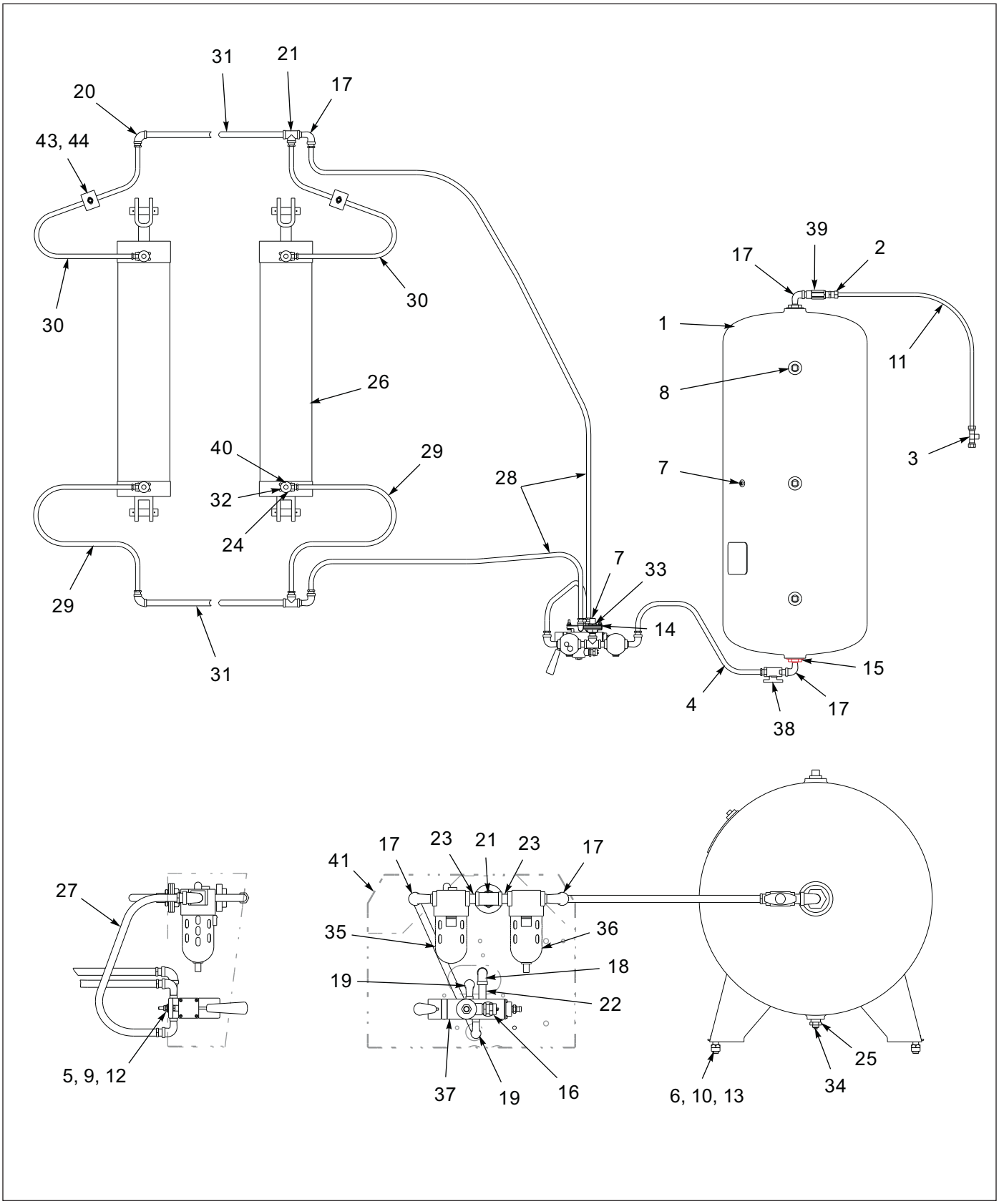

Figure 1-10: 60-Gallon Air Gate

60-Gallon Air Gate

ITEM	PART NUMBER	DESCRIPTION	QTY.
1	132047	RESERVOIR AIR TANK, 60GAL	1
2	1-297-010007-15	FITTING AIR 1/2 TUBE X 3/8NPT	1
3	1-297-010015-10	FITTING,AIR,BR TEE 1/2T-3/8P	REF
4	1-384-010041-2	HOSE AIR 1/2X104 (1/2ENDS)	1
5	1-512-010005-01	NUT,HEX,SLFLKG GRB 1/4-20	2
6	1-512-010005-09	NUT,HEX,SLFLKG, 1/2-13 GRB	4
7	1-560-010002-02	PLUG, PIPE, 1/4NPT	2
8	1-560-010002-05	PLUG,PIPE, 3/4-14NPTF	
9	1-654-010047-07	SCREW,HX CP 1/4-20UNCX1-1/4G5	2
10	1-654-010055-02	SCREW 1/2-13UNCX1-1/4 CP GR5	4
11	1-833-010003	TUBING NYLON 1/2 OD	REF
12	1-861-010032-07	WASHER,FLAT 1/4 ZP	2
13	1-861-010032-15	WASHER, FLAT 1/2 W ZP/CD	4
14	1-861-010032-25	WASHER FL 1IN WIDE ZP	3
15	104-0415	BUSHING HEX HD 2X1/2NPT GALV	2
16	106-0941	CONNECTOR	1
17	110-0957	ELBOW 90ST 1/2NPT GALV	6
18	110-5164	ELBOW-90 3/8 NPT GALV	1
19	110-5166	ELBOW STREET 90 3/8NPT GALV	2
20	110-5175	ELBOW 90 1/2NPT GALV	2
21	110-5184	TEE 1/2NPT GALV	3
22	110-5744	NIPPLE 3/8NPTX2LG TBE GALV	1
23	110-6070	NIPPLE CLOSE 1/2NPT GALV	3
24	-----	REDUCER 1/2 NPT X 3/8 NPT	4
25	2081-8-4S	RDCR 5 EXT PIPE-.25 INT PIPE	1
26	3-242-010109	CYLINDER AIR 7X30 PRINCE	2
27	3-384-010005	HOSE AIR 1/2X30 .38-.5NPT	1
28	3-384-010006	HOSE AIR 1/2X36 .38-.5NPT	2
29	3-384-010007	HOSE AIR 1/2X48 .38-.5NPT	2
30	3-384-010010	HOSE AIR 1/2X84 .38-.5NPT	2
31	3-561-010014	PIPE THREADED ENDS 1/2X132	2
32	-----	NIPPLE, ALL THREAD	4
33	55B61	FRAME UNION	1
34	56D4	COCK,DRAIN AIR TANK VEL036019	1
35	758-012	LUBRICATOR AIR	1
36	758-013	FILTER AIR	1
37	758-014	VALVE AIR CONTROL	1
38	758-015	VALVE 1/2 IN AIR BALL	1
39	758-183	VALVE AIR PRES. PROT.W/CHECK	1
40	758-185	VALVE QUICK EXHAUST 3/8	4
41	S-051-027	BOX WLDMT VALVE	REF
42	751-141	CHAIN STEEL 1/2X72IN ZP **(NOT SHOWN)**	2
43	1-510-010001	NUT, 3/8-16 UNC FLANGE LOCK	4
44	2-181-010001	HOSE CLAMP	4

Air Brakes

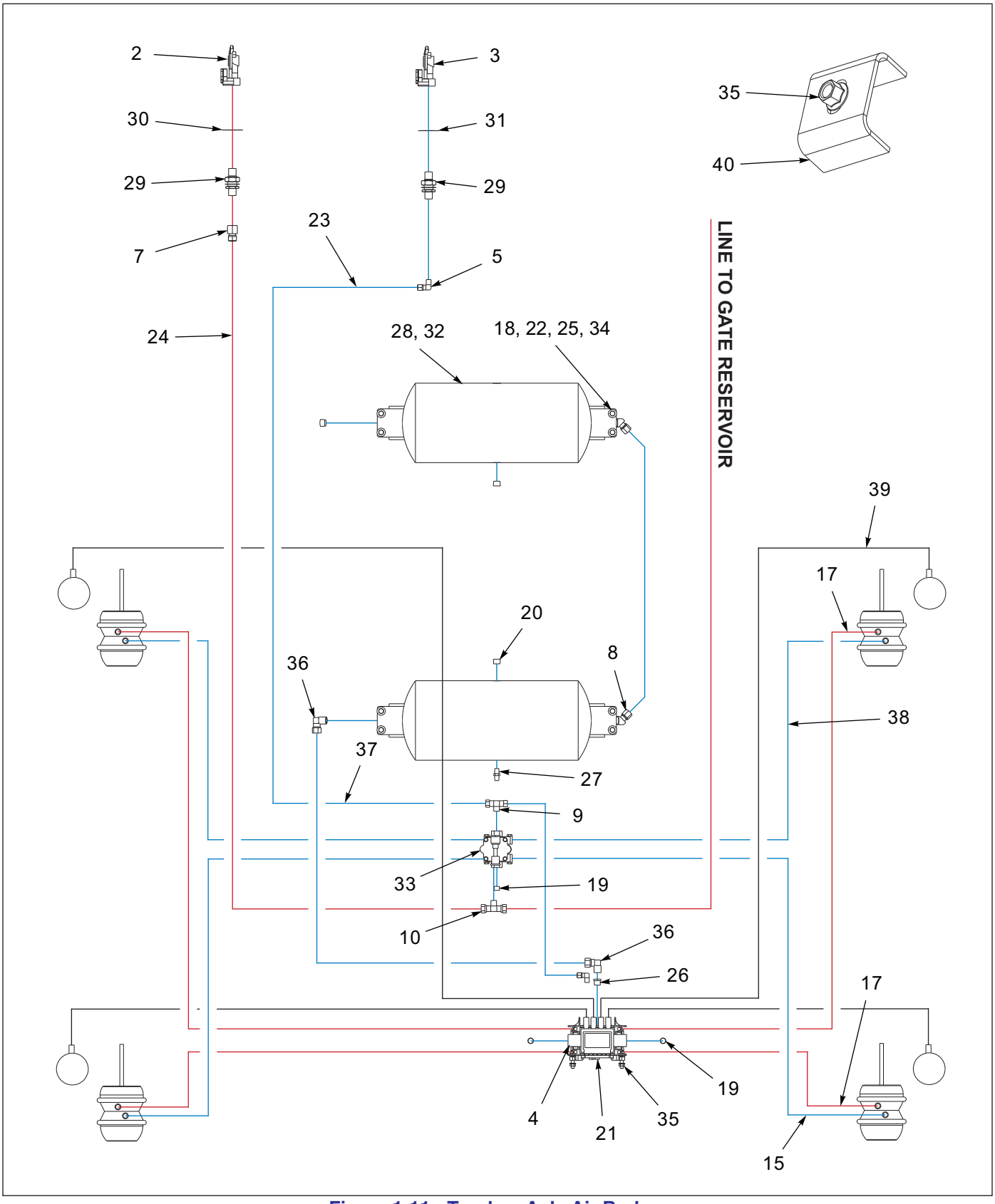

Figure 1-11: Tandem Axle Air Brakes

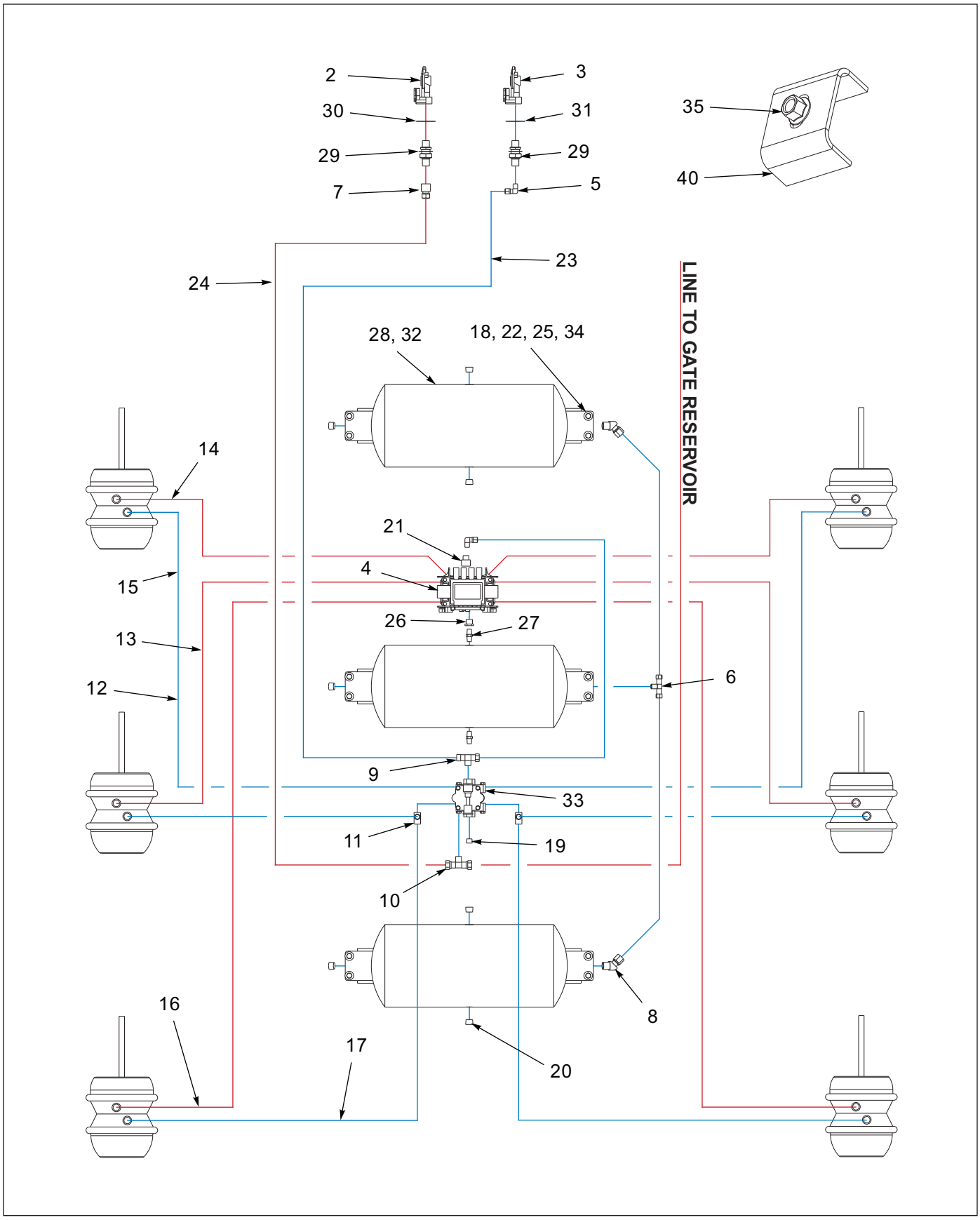

Figure 1-12: Triple Axle Air Brakes

Tandem & Triple Axle Air Brakes

ITEM	PART NUMBER	DESCRIPTION	QTY.	
1	103861	SENSOR EXT CABLE-3M (10FT)	--	REF
2	108801	GLAD HAND-RED-AIR	1	1
3	108802	GLAD HAND-BLUE-AIR	1	1
4	114588	ECU/VALVE ASSEMBLY 4S/2M	1	1
5	1-297-010008-18	FITTING,AIR 90 3/8TUBEX1/4NPT	2	22
6	1-297-010015-11	FITTING,AIR,BR TEE 1/2T-1/2P	--	1
7	1-297-010012-16	FITTING,AIR,FEM CONN1/2T-1/2P	1	1
8	1-297-010013-16	FITTING,AIR 1/2X1/2 45 M/ELB	2	2
9	1-297-010015-07	FITTING,AIR,BR TEE 3/8T-3/8P	1	1
10	1-297-010015-10	FITTING,AIR,BR TEE 1/2T-3/8P	1	1
11	1-297-010018-03	FITTING,3/8 BRASS PIPE,ST TEE	--	2
12	1-384-010038018	HOSE ASM AIR 3/8X18,W/3/8 END	--	2
13	1-384-010038030	HOSE ASM AIR 3/8X30,W/3/8 END	--	2
14	1-384-010038038	HOSE ASM AIR 3/8X38,W/3/8 END	--	2
15	1-384-010038060	HOSE ASM AIR 3/8X60,W/3/8 END	2	2
16	1-384-010038084	HOSE ASM AIR 3/8X84,W/3/8 END	--	2
17	1-384-010038-2	HOSE ASM AIR 3/8X66,W/3/8 END	4	2
18	1-512-010005-05	NUT, HEX, SLFLKG GRB 3/8-16	8	12
19	1-560-010002-03	PLUG, PIPE, 3/8NPTF	3	1
20	1-560-010002-04	PLUG, PIPE, 1/2NPT	3	7
21	1-560-010002-05	PLUG,PIPE, 3/4-14NPTF	1	1
22	1-654-010051-08	SCREW,HEX CAP,3/8-16X1-3/4 G	10	12
23	1-833-010002	TUBING NYLON 3/8 OD	REF	REF
24	1-833-010003	TUBING NYLON 1/2 OD	REF	REF
25	1-861-0100032-11	WASHER, FLAT 3/8 W ZP/CD	18	24
26	118-2659-9	BUSHING 1/2NPTX3/4NPT STL	1	1
27	2083-8-8S	NIPPLE 1/2NPTX1/2NPT	1	2
28	3-780-010002	TANK AIR 9.5X22.5 .5NPT PORTS	2	3
29	55B61	FRAME UNION	2	2
30	55B61-6	TAG EMER LINE VELVAC 035025	1	1
31	55B61-7	TAG SERVICE LINE VELVC 035026	1	1
32	757-363	VALVE CABLE PULL DRAIN	2	3
33	758-181	VALVE TASK 4 PORT	1	1
34	805-2	BUSHINGS, STEP	16	24
35	1-510-010001	NUT, 3/8-16 UNC FLANGE LOCK	4	5
36	1-297-010008-26	FITTING AIR 5/8TUBE X1/2NPT90	2	--
37	117304	TUBING NYLON 5/8	2	--
38	1-384-010038072	HOSE ASM AIR 3/8X72,W/3/8 END	2	--
39	101848	SENSOR EXT. CABLE,1.78M,ABS	4	--
40	1-281-010001	HOSE CLAMP	2	3

Table provided for general use.

NOTES:

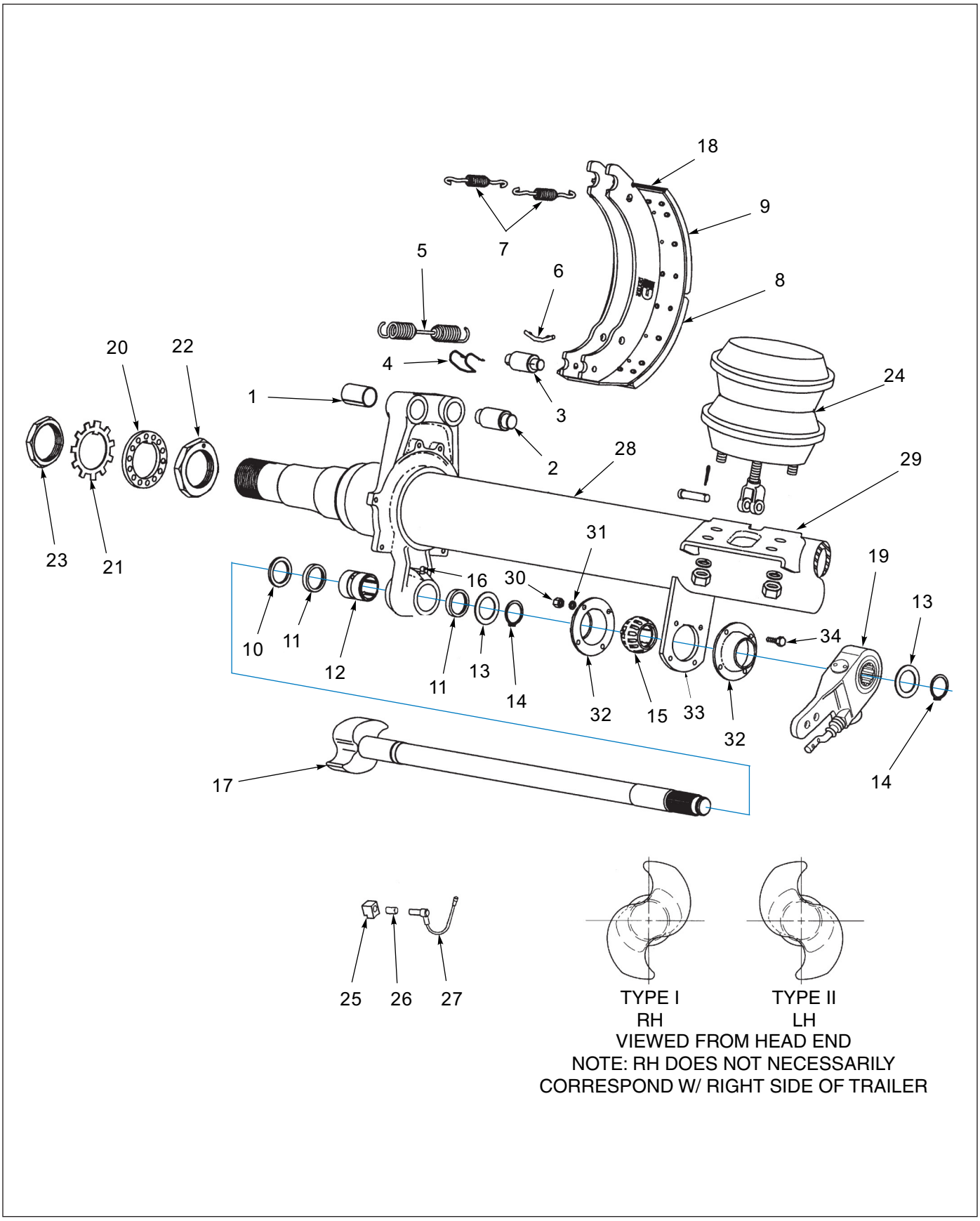

Figure 1-13: 16-1/2 x 7 Brakes

16-1/2 x 7 Brakes

ITEM	PART NUMBER	DESCRIPTION	QTY.
1	-----	BUSHING, SPIDER ANCHOR PIN	4
2	-----	ANCHOR PIN	4
3	014-065-00	ROLLER	4
4	071-122-00	RETAINER, ROLLER	4
5	046-096-00	SPRING, SHOE RETRACTOR	2
6	056-018-00	RETAINER PIN, RETRACTOR SPRING	4
7	046-097-00	SPRING, KEEPER	4
8	-----	LINING, BRAKE BLOCK CAM	2
9	-----	LINING, BRAKE BLOCK ANCHOR	4
10	005-096-00	D" WASHER, CAMSHAFT	2
11	010-052-00	SEAL, GREASE	4
12	-----	BUSHING, CAMSHAFT SPIDER	2
13	-----	WASHER, CAMSHAFT END	2
14	069-078-00	RETAINER, CAMSHAFT END	2
15	-----	BUSHING, CAMSHAFT SUPPORT	2
16	-----	FITTING, GREASE 45°	2
17	137461	CAMSHAFT, 25" LH	1
17	137485	CAMSHAFT, 25" RH	1
18	040-180-00	SHOE AND LINING ASSEMBLY	4
19	139383	SLACK ADJUSTER, AUTOMATIC	2
20	005-098-00	WASHER, SPINDLE LOCK	2
21	005-099-00	WASHER, TABBED SPINDLE LOCK	2
22	006-114-00	NUT, INNER SPINDLE	2
23	006-115-00	NUT, OUTER SPINDLE	2
24	034-057-01	AIR CHAMBER, SERVICE BRAKE	2
25	103805	SENSOR BLOCK	2
26	144979	RETAINER CLIP	2
27	101847	ABS SENSOR CABLE-4M 90° **(1FT)**	2
28	-----	BEAM W/ BRACKETS	1
29	034-048-00	AIR CHAMBER BRACKET	2
30	006-099-00	RETAINER NUT, CAM BUSH	8
31	005-079-00	LOCK WASHER	8
32	034-032-00	PLATE, BUSHING RETAINER **(EACH HALF SOLD SEPERATELY)**	4
33	034-031-00	PLATE, CAMSHAFT SUPPORT BRACKET	4
34	007-139-00	BOLT, RETAINER PLATE	8
35	159001	SHOE AND LINING KIT **(NOT SHOWN, PER AXLE)**	REF

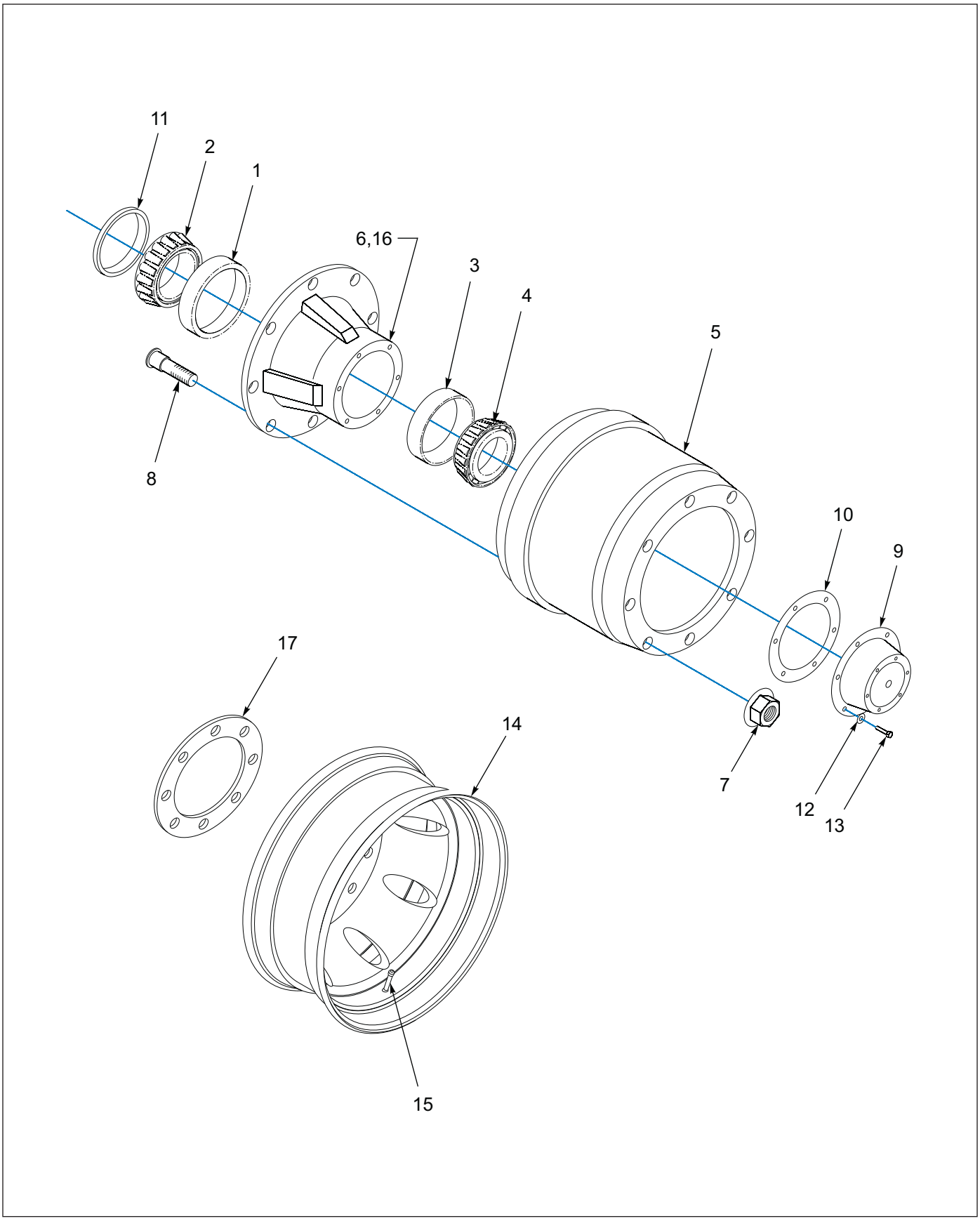

Figure 1-14: Outboard Pilot Mount Hub and Drum Assembly

Outboard Pilot Mount Hub and Drum Assembly

ITEM	PART NO.	DESCRIPTION	QTY.
1	HM218210	INNER BEARING CUP	1
2	HM218248	INNER BEARING CONE	1
3	HM212011	OUTER BEARING CUP	1
4	HM212049	OUTER BEARING CONE	1
5	63680	OUTBOARD MOUNTED BRAKE DRUM - 8 BOLT	1
6	112492	HUB/DRUM, 8 BOLT, 12-1/4 PILOT ABS	1
7	179933	NUT, HEX M22 X 1.5	8
8	113536	STUD, 22MM 3.5 STANDOUT	8
9	4009	CAP, HUB	1
10	3067	GASKET, OIL CAP	1
11	3-659-010012	SEAL	1
12	1-861-010034-10	WASHER, SPLIT LOCK 5/16	6
13	1-654-010049-03	SCREW, HEX HEAD CAP, 5/16-18 X 3/4 GR5	6
14	100402	WHEEL, ALUM PILOT MT 17.5 X 6.75, POLISHED - 8 BOLT **(8 ACCENT HOLES)**	REF
14	3-870-010097	WHEEL, DISC PILOT MT 17.5 X 6.75 - 8 BOLT	REF
14	112047	WHEEL, ALUM PILOT, 17.5 X 6.75 MACH	REF
14	223938	WHEEL, AL PILOT 17.5X6.75 POL **(10 ACCENT HOLES)**	REF
15	TR573	VALVE STEM - STEEL WHEEL	1
15	100401	VALVE STEM TR543C	1
15	1-843-010014	VALVE EXSTENSION STEM 3”	1
16	-----	ABS TONE RING **(NOT SHOWN, NOT SOLD SEPARATELY)**	1
17	114619	WHEEL GUARD 8 HOLE 275 MM BC - USED W/ ALUMINUM	1
17	3-870-010107	WHEEL GUARD 10 HOLE 285.75MM BC **(NOT SHOWN)**	1

Grease

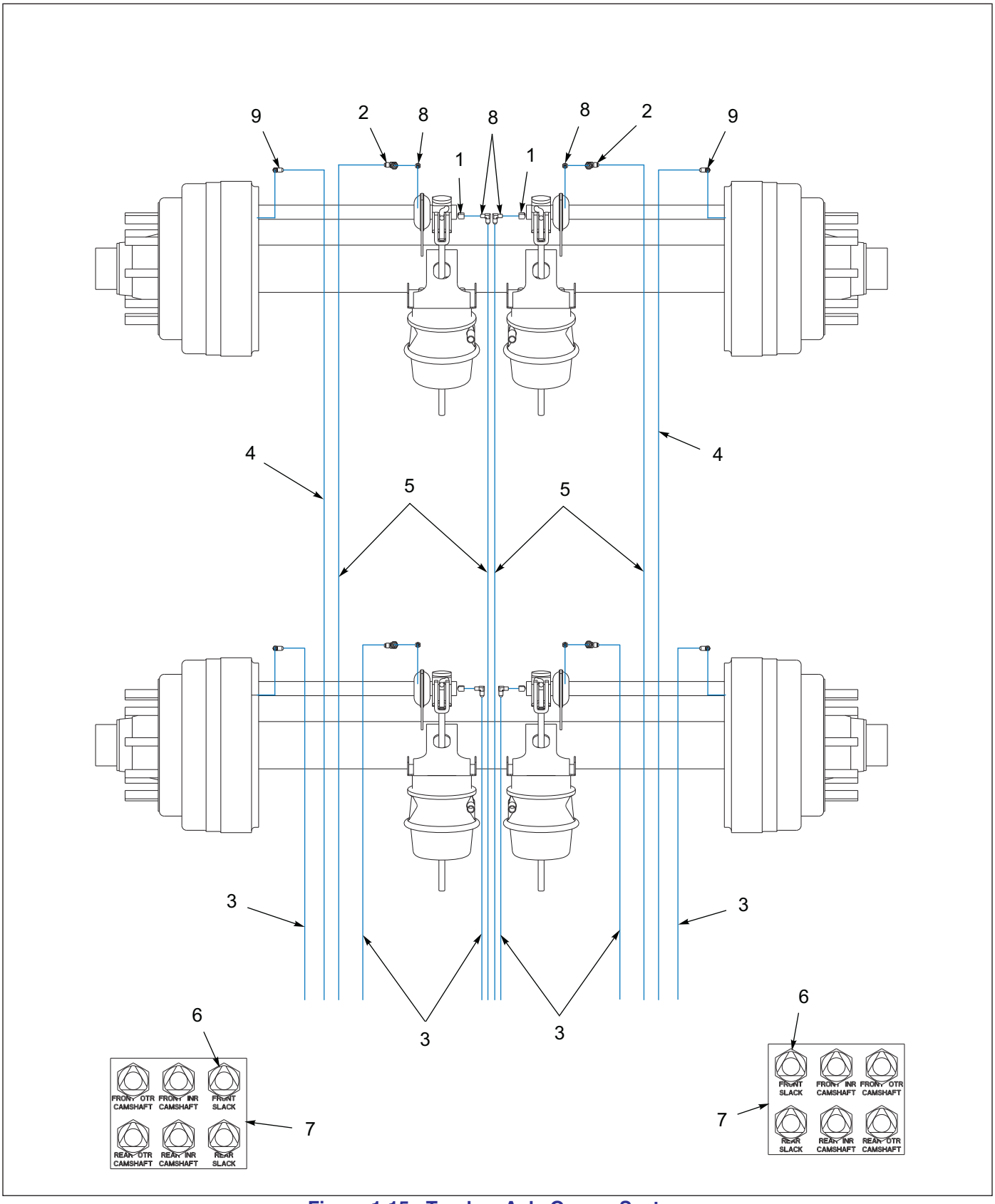

Figure 1-15: Tandem Axle Grease System

Tandem Axle Grease System

ITEM	PART NUMBER	DESCRIPTION	QTY.
1	101528	ELBOW,BRASS PIPE STREET	4
2	138155	ADAPTER 90 #4 JIC	4
3	14244	HOSE ASSY,GREASE 1/4X60	6
4	142445	HOSE ASSY,GREASE 1/4X102	2
5	142446	HOSE ASSY,GREASE 1/4X118	4
6	142545	NUT 7/16 FOR BULKHEAD	12
7	142553	DECAL, GREASE TRL U/C	2
8	161797	ADAPTER STR 5-16-18 #4JIC	4
9	2024-2-4S	ADAPTER, ELBOW	8

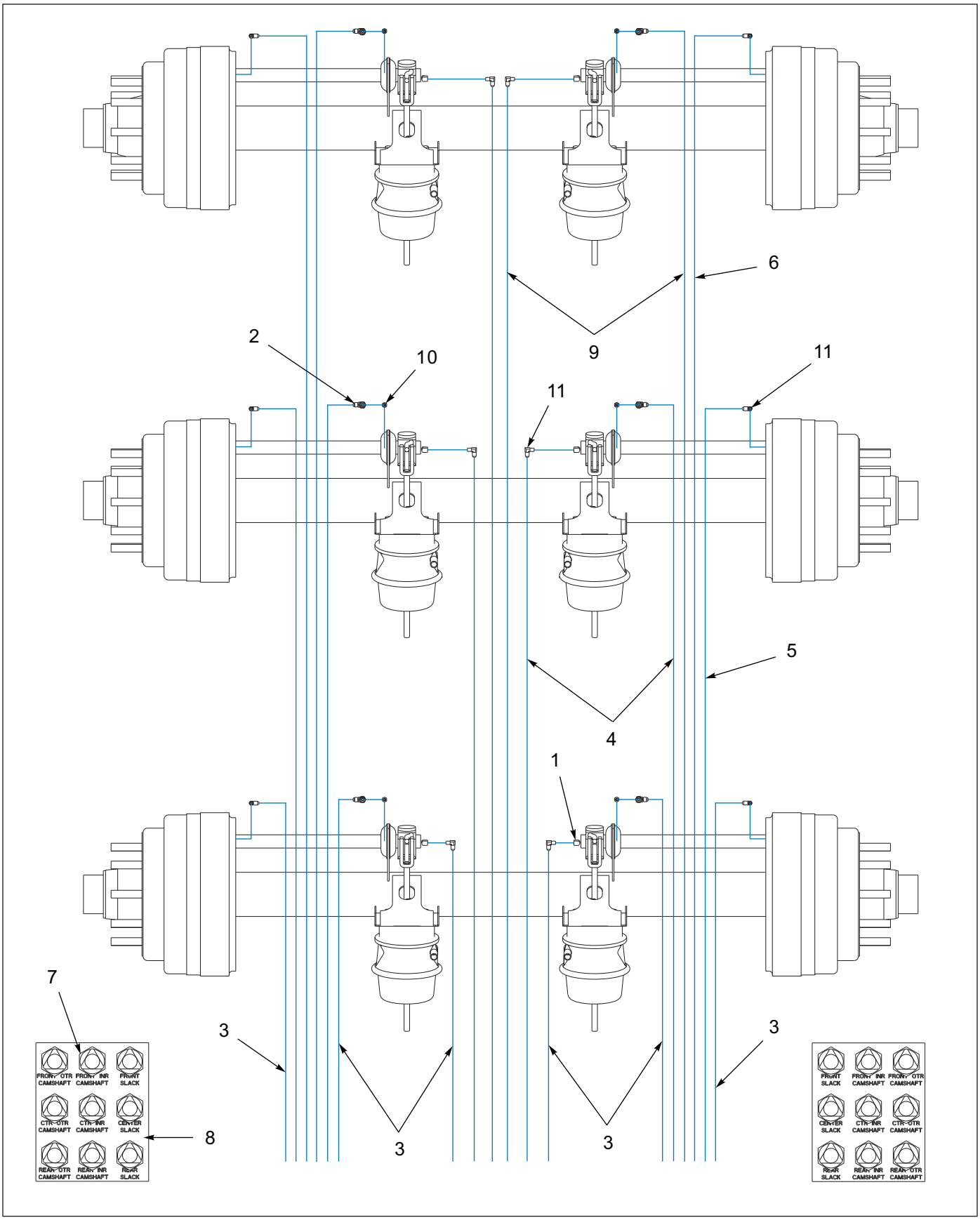

Figure 1-16: Triple Axle Grease System

Triple Axle Grease System

ITEM	PART NUMBER	DESCRIPTION	QTY.
1	101528	ELBOW,BRASS PIPE STREET	6
2	138155	ADAPTER 90 #4 JIC	6
3	142442	HOSE ASSY,GREASE 1/4X60	6
4	142445	HOSE ASSY,GREASE 1/4X102	4
5	142446	HOSE ASSY,GREASE 1/4X118	2
6	142451	HOSE ASSY,GREASE 1/4X156	2
7	142545	NUT 7/16 FOR BULKHEAD	18
8	142553	DECAL, GREASE TRL U/C	2
9	144614	HOSE ASSY GREASE 1/4X172	4
10	161797	ADAPTER STR 5-16-18 #4JIC	6
11	2024-2-4S	ADAPTER, ELBOW	12

Suspension

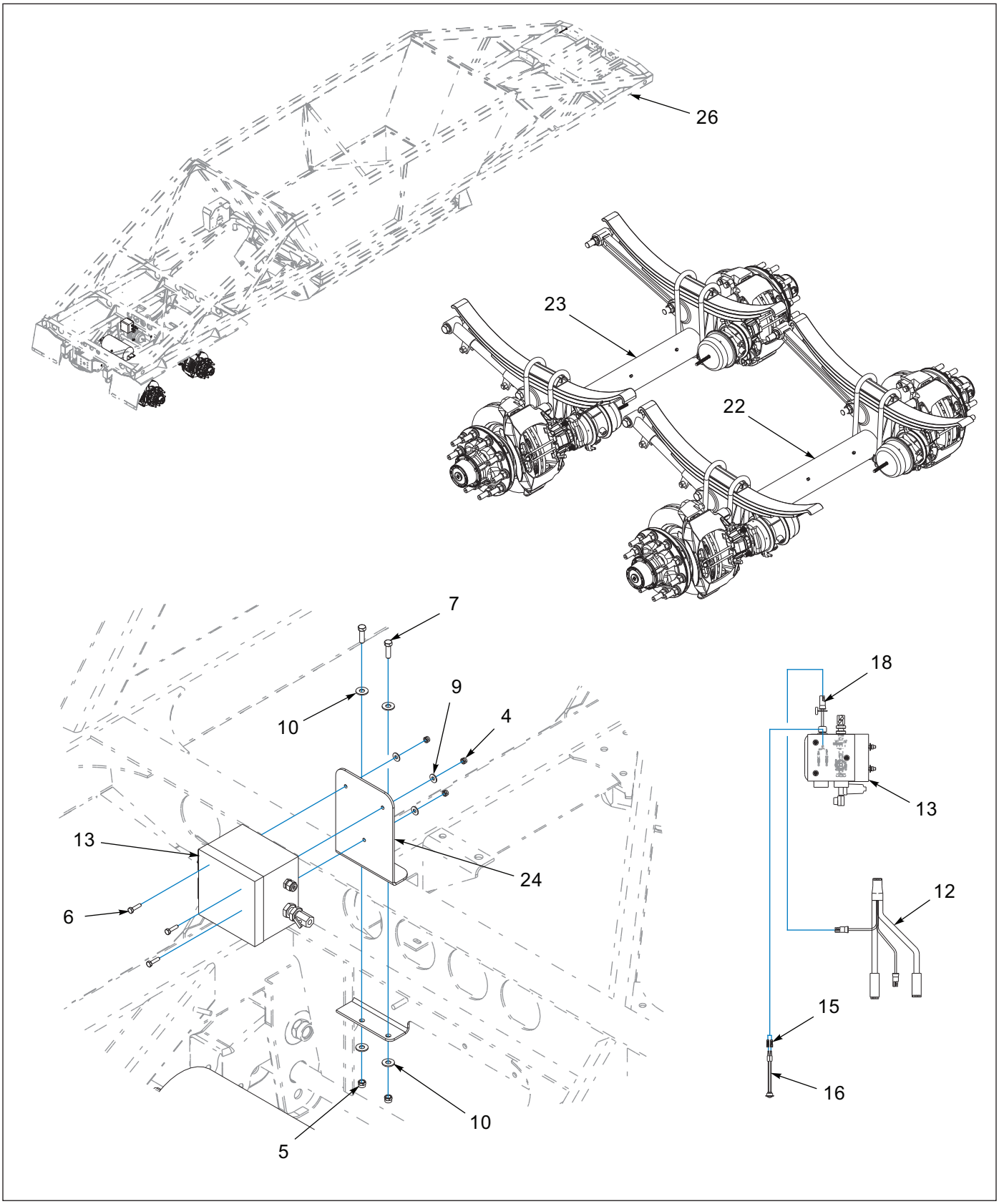

Figure 1-17: Spring Ride w/Meritor Tire Inflation (1 of 2)

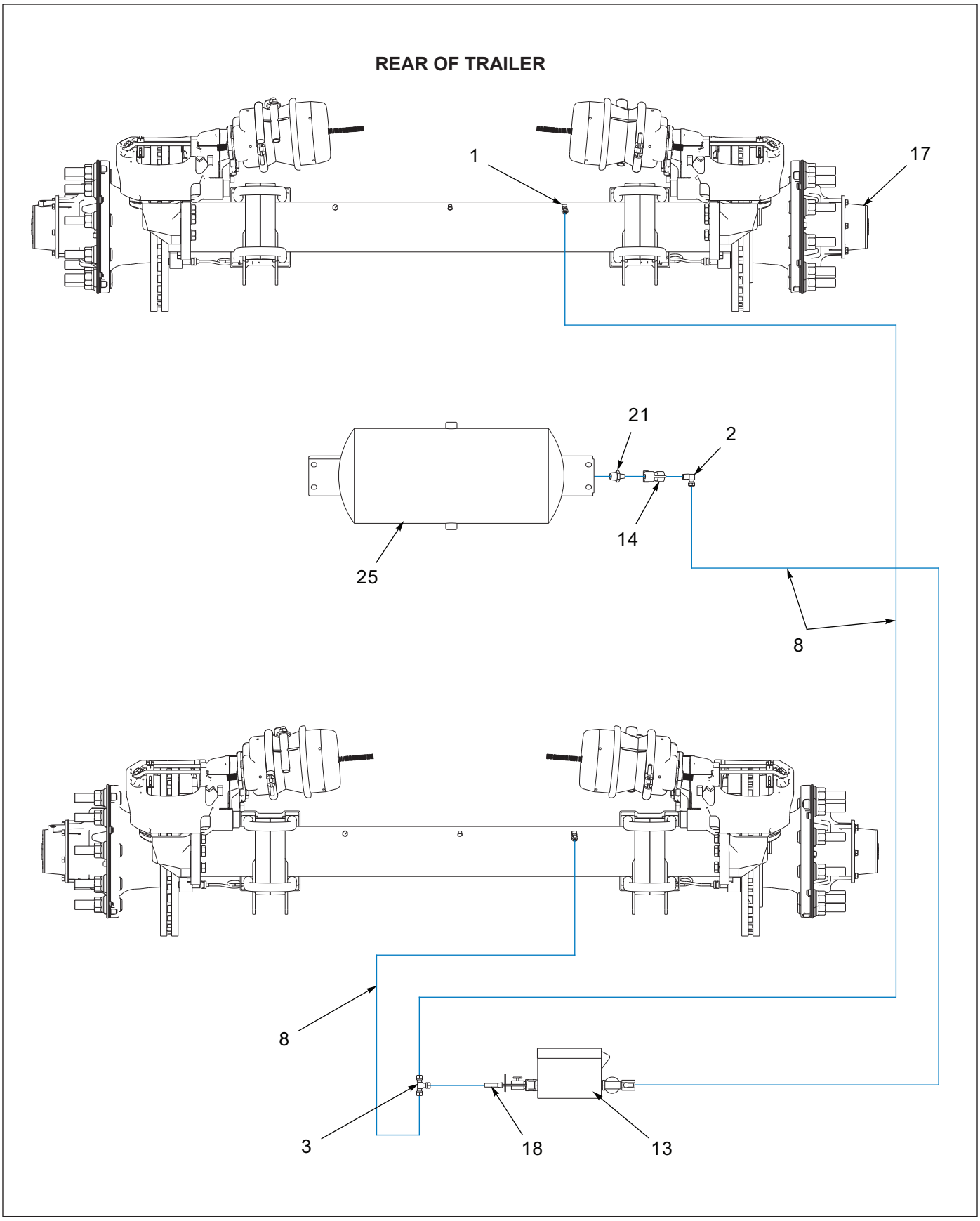

Figure 1-18: Spring Ride w/Meritor Tire Inflation (2 of 2)

Spring Ride w/Meritor Tire Inflation

ITEM	PART NUMBER	DESCRIPTION	QTY.
1	1-297-010008-05	FITTING,AIR 90 1/4TUBEX1/8NPT	REF
2	1-297-010008-07	FITTING AIR 90 1/4TUBEX1/4NPT	REF
3	1-297-010010-01	FITTING,AIR,UNION TEE 1/4	REF
4	1-512-010005-01	NUT,HEX,SLFLKG GRB 1/4-20	3
5	1-512-010005-05	NUT, HEX, SLFLKG GRB 3/8-16	2
6	1-654-010047-06	SCREW,HX CP 1/4-20UNCX1 GR5	3
7	1-654-010051-06	SCREW,HEX CAP 3/8-16UNCX1-1/4	2
8	1-833-010001	TUBING NYLON 1/4 OD	REF
9	1-861-010032-07	WASHER,FLAT 1/4 ZP	3
10	1-861-010032-11	WASHER, FLAT 3/8 W ZP/CD	4
11	115629	LOCKTITE 592 250ML TUBE **(NOT SHOWN)**	.25
12	143103	HARNESS ECHAIN GROTE	REF
13	168593	THERMALERT TIS 2 AXLE	1
14	168610	THERMALERT PRESS PROT VALVE	REF
15	168613	THERMALERT WIRING HARNESS	REF
16	183413	LIGHT,WHT LED .75 CL/MK GROTE	1
17	197613	HUB CAP MTIS OIL AXLE	4
18	202207	HARNESS ASSY MOD MTIS POWER	1
19	205836	ORANGE WARNING DECAL MTIS **(NOT SHOWN)**	REF
20	205837	YELLOW WARNING DECAL MTIS **(NOT SHOWN)**	REF
21	2083-8-4S	NIPPLE HEX 1/2PIPE - 1/4PIPE	REF
22	218073	SUSP REAR DSC BK BTM DMP	1
23	218074	SUSP SPG FRT DSC BK BTM DMP	1
24	218078	MOUNT BRKT MTIS CONTROL BOX	1
25	3-780-010002	TANK AIR 9.5X22.5 .5NPT PORTS	REF
26	S-083-023	FRAME X39FT SEMI 1 GATE	REF

Mud Flap

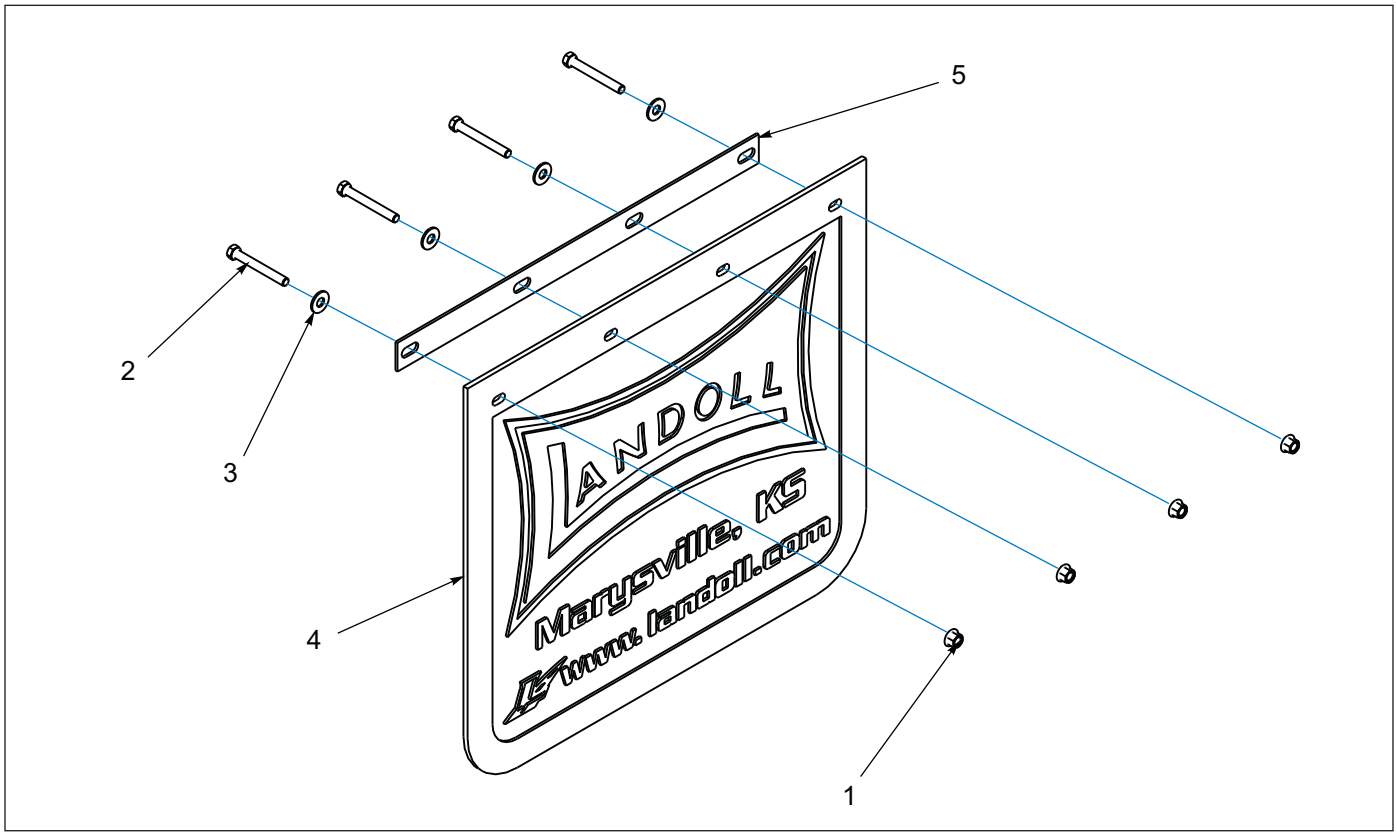

Figure 1-19: Mud Flap Assembly

Mud Flap Assembly

ITEM	PART NUMBER	DESCRIPTION	QTY.
1	1-510-010001	NUT, 3/8-16 UNC FLANGE LOCK	
2	1-654-010051-07	SCREW,HEX CAP,3/8-16UNCX1-1/2	
3	1-861-010032-07	WASHER,FLAT 1/4 ZP	
4	3-485-010001	FLAP, MUD 21 IN	
5	3-762-010017	CLAMP MUD FLAP	

Legs

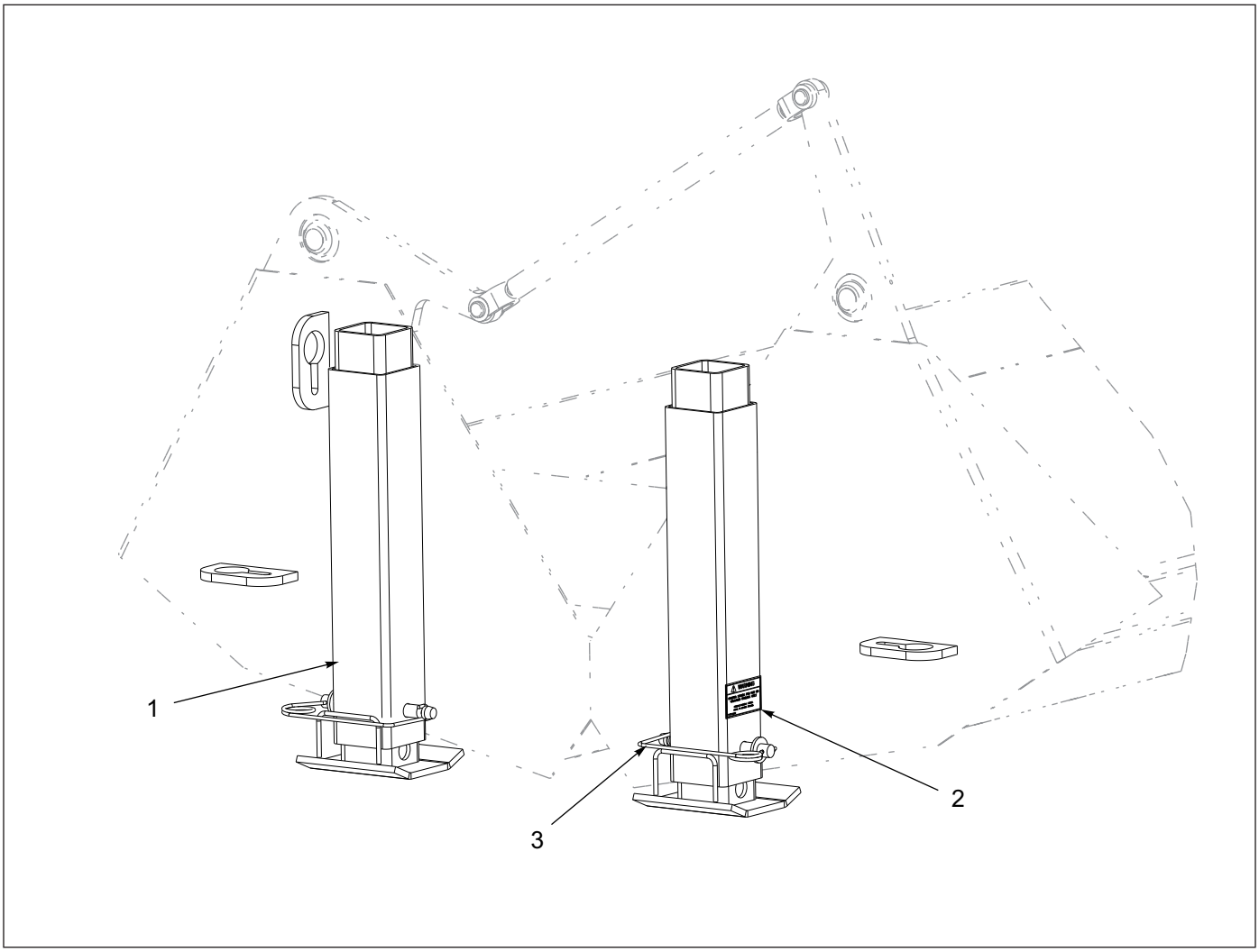

Figure 1-20: Gate Mounted Pin-Drop Legs

Gate Mounted Pin-Drop Legs

ITEM	PART NUMBER	DESCRIPTION	QTY.
1	144863	LEG WLDMT STABILIZER	2
2	3-573-010111	DECAL SPARTAN PARK STANDS	2
3	346SL	LOCK HITCH PIN	2

Options

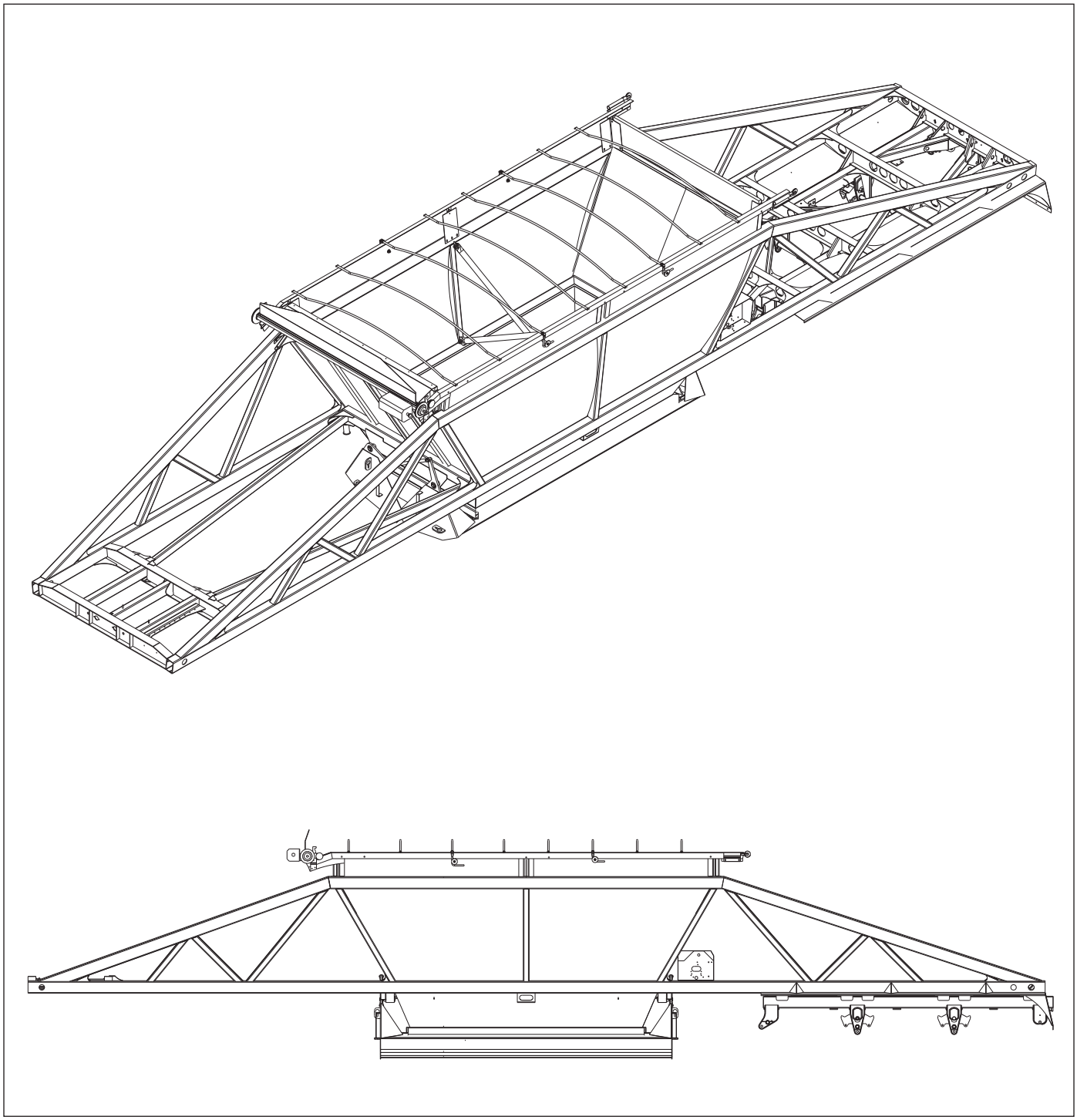

Figure 1-21: Tarp

Tarp

ITEM	PART NUMBER	DESCRIPTION	QTY.
-----	-----	CALL LANDOLL FOR DETAILS AND AVAILABILITY	REF

Table provided for general use.

NOTES:

Index

Numerics

005-079-00 1-23
005-096-00 1-23
005-098-00 1-23
005-099-00 1-23
006-099-00 1-23
006-114-00 1-23
006-115-00 1-23
007-139-00 1-23
010-052-00 1-23
014-065-00 1-23
034-031-00 1-23
034-032-00 1-23
034-048-00 1-23
034-057-01 1-23
040-180-00 1-23
046-096-00 1-23
046-097-00 1-23
056-018-00 1-23
069-078-00 1-23
071-122-00 1-23
100401 1-25
100402 1-25
101528 . . . . . 1-27, 1-29
101847 1-23
101848 1-20
101855 1-4
103805 1-23
103861 1-20
104-0415 1-17
106-0941 1-17
108628 1-14
108739 1-12
108801 1-20
108802 1-20
110-0759 1-14
110-0957 1-17
110-5164 1-17
110-5166 1-17
110-5175 1-17
110-5184 1-17
110-5744 1-17
110-6070 1-17
112047 1-25
112492 1-25
113536 1-25
114588 1-20
114619 1-25
115629 1-32
117304 1-20
118-2659-9 1-20
122788 1-4
1-281-010001 1-20
1-297-010007-15 1-17
1-297-010008-05 1-32
1-297-010008-07 1-32
1-297-010008-18 1-20
1-297-010008-26 1-20
1-297-010010-01 1-32
1-297-010012-16 1-20
1-297-010013-16 1-20
1-297-010015-07 1-20
1-297-010015-10 . . . . . 1-17, 1-20
1-297-010015-11 1-20
1-297-010018-03 1-20
132047 1-17
1-343-010006 1-12
137461 1-23
137485 1-23

138155 ..... *1-27*, *1-29*
1-384-010038018 ..... *1-20*
1-384-010038030 ..... *1-20*
1-384-010038038 ..... *1-20*
1-384-010038060 ..... *1-20*
1-384-010038072 ..... *1-20*
1-384-010038084 ..... *1-20*
1-384-010038-2 ..... *1-20*
1-384-010041-2 ..... *1-17*
139383 ..... *1-23*
14244 ..... *1-27*
142442 ..... *1-29*
142445 ..... *1-27*, *1-29*
142446 ..... *1-27*, *1-29*
142451 ..... *1-29*
142545 ..... *1-27*, *1-29*
142553 ..... *1-27*, *1-29*
143103 ..... *1-32*
143104 ..... *1-12*
143108 ..... *1-12*
143109 ..... *1-12*
143110 ..... *1-12*
143111 ..... *1-12*
143114 ..... *1-12*
143117 ..... *1-12*
143118 ..... *1-12*
143119 ..... *1-12*
144608 ..... *1-12*
144609 ..... *1-12*
144614 ..... *1-29*
144679 ..... *1-12*
144680 ..... *1-12*
144863 ..... *1-34*
144979 ..... *1-23*
147231 ..... *1-12*
147232 ..... *1-12*
147233 ..... *1-12*
147234 ..... *1-12*
147237 ..... *1-12*
147238 ..... *1-12*
147239 ..... *1-12*
1-510-010001 ..... *1-17*, *1-20*, *1-33*
1-512-010005-01 ..... *1-12*, *1-17*, *1-32*
1-512-010005-03 ..... *1-12*, *1-14*
1-512-010005-05 ..... *1-14*, *1-20*, *1-32*
1-512-010005-09 ..... *1-17*
1-512-010007-03 ..... *1-12*
153750 ..... *1-4*
153752 ..... *1-4*
153753 ..... *1-4*
153797 ..... *1-4*
155178 ..... *1-4*
155780 ..... *1-4*
1-560-010002-02 ..... *1-17*
1-560-010002-03 ..... *1-20*
1-560-010002-04 ..... *1-20*
1-560-010002-05 ..... *1-17*, *1-20*
156010 ..... *1-4*
159001 ..... *1-23*
161797 ..... *1-27*, *1-29*
1-654-010047-04 ..... *1-12*
1-654-010047-06 ..... *1-12*, *1-32*
1-654-010047-07 ..... *1-17*
1-654-010049-03 ..... *1-25*
1-654-010049-06 ..... *1-12*
1-654-010051-06 ..... *1-32*
1-654-010051-07 ..... *1-14*, *1-33*
1-654-010051-08 ..... *1-20*
1-654-010055-02 ..... *1-17*
1-656-010003051 ..... *1-12*
168593 ..... *1-32*
168610 ..... *1-32*
168613 ..... *1-32*
169410 ..... *1-12*
171950 ..... *1-4*
1-796-010003-02 ..... *1-12*

179933 ..... *1-25*
1-833-010001 ..... *1-32*
1-833-010002 ..... *1-20*
1-833-010003 ..... *1-17*, *1-20*
183413 ..... *1-32*
1-843-010014 ..... *1-25*
1-861-0100032-11 ..... *1-20*
1-861-010032-07 ..... *1-12*, *1-17*, *1-32*, *1-33*
1-861-010032-09 ..... *1-12*
1-861-010032-11 ..... *1-32*
1-861-010032-15 ..... *1-17*
1-861-010032-25 ..... *1-17*
1-861-010034-07 ..... *1-12*
1-861-010034-10 ..... *1-25*
1-879-010008 ..... *1-12*
1-879-010010 ..... *1-12*
197613 ..... *1-32*
202207 ..... *1-32*
2024-2-4S *1-27*, *1-29*
205836 ..... *1-32*
205837 ..... *1-32*
2081-8-4S *1-17*
2083-8-4S *1-32*
2083-8-8S *1-20*
218073 ..... *1-32*
218074 ..... *1-32*
218078 ..... *1-32*
2-181-010001 ..... *1-17*
223938 ..... *1-25*
239-3646-4 ..... *1-12*
2-573-010335 ..... *1-4*
3067 ..... *1-25*
3-156-010007 ..... *1-12*
3-201-010001036 ..... *1-12*
3-242-010109 ..... *1-17*
3-272-010003 ..... *1-12*
3-272-010021 ..... *1-12*
3-384-010005 ..... *1-17*
3-384-010006 ..... *1-17*
3-384-010007 ..... *1-17*
3-384-010010 ..... *1-17*
346SL *1-34*
3-485-010001 ..... *1-33*
3-561-010014 ..... *1-17*
3-573-010060 ..... *1-4*
3-573-010111 ..... *1-4*, *1-34*
3-573-010210 ..... *1-4*
3-573-010377 ..... *1-4*
3-573-010378 ..... *1-4*
3-659-010012 ..... *1-25*
3-762-010017 ..... *1-33*
3-780-010002 ..... *1-20*, *1-32*
3-870-010097 ..... *1-25*
3-870-010107 ..... *1-25*
4009 ..... *1-25*
43029 ..... *1-12*
503-011 ..... *1-14*
503-012 ..... *1-14*
503-022 ..... *1-14*
55B61 ..... *1-17*, *1-20*
55B61-6 ..... *1-20*
55B61-7 ..... *1-20*
56D4 ..... *1-17*
583-159 ..... *1-12*
63680 ..... *1-25*
750-029 ..... *1-12*
751-141 ..... *1-17*
757-363 ..... *1-20*
758-012 ..... *1-17*
758-013 ..... *1-17*
758-014 ..... *1-12*, *1-17*
758-015 ..... *1-17*
758-181 ..... *1-20*
758-183 ..... *1-17*
758-185 ..... *1-17*
805-2 ..... *1-20*

B

B477R 1-12

H

HM212011 1-25
HM212049 1-25
HM218210 1-25
HM218248 1-25

S

S-003-015 1-14
S-003-018 1-14
S-051-027 1-17
S-083-023 1-32

T

TR573 1-25

Document Control Revision Log:

Date	Form #	New/Updated	Improvement(s): Description and Comments
06/2019	F-1043	NEW	NEW PARTS MANUAL

Equipment from Landoll Corporation is built to exacting standards ensured by ISO 9001 registration at all Landoll manufacturing facilities.

302D-B/305D-B

Parts Manual

Re-Order Part Number F-1043-0619

LANDOLL CORPORATION
1900 North Street
Marysville, Kansas 66508
(785) 562-5381
800-428-5655 ~ WWW.LANDOLL.COM

Copyright 2019. Landoll Corporation
"All rights reserved, including the right to reproduce this material or portions thereof in any form."

Scan to go to www.landoll.com