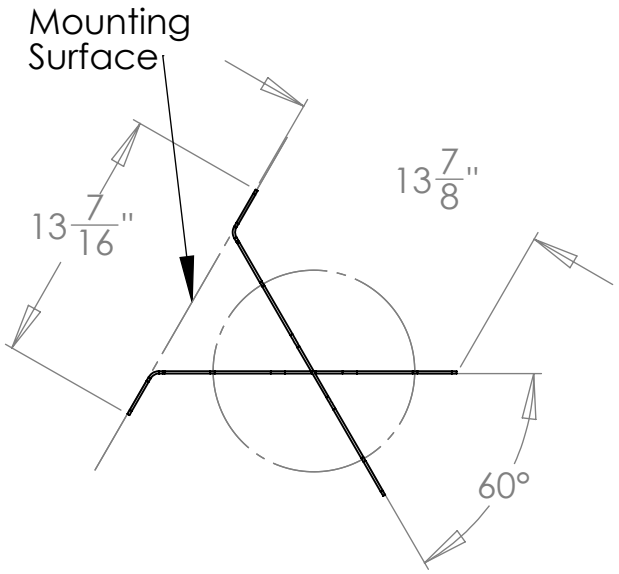

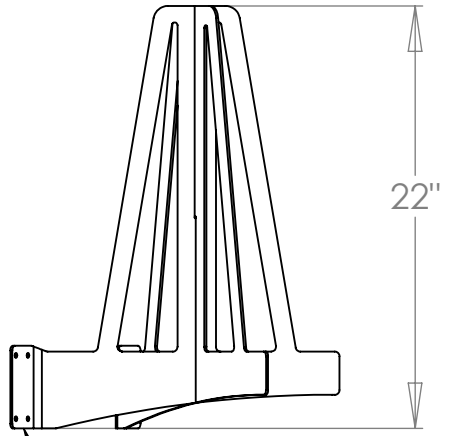

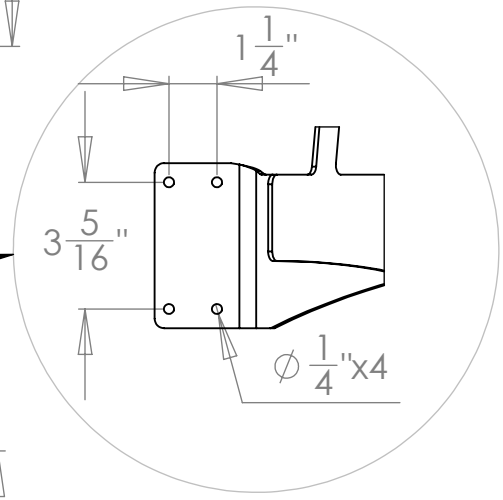

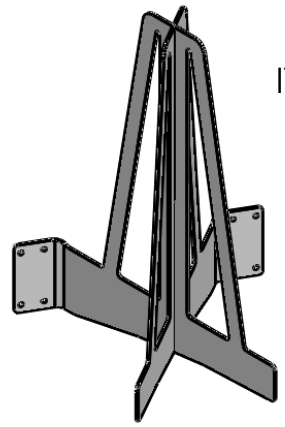

ITD1102

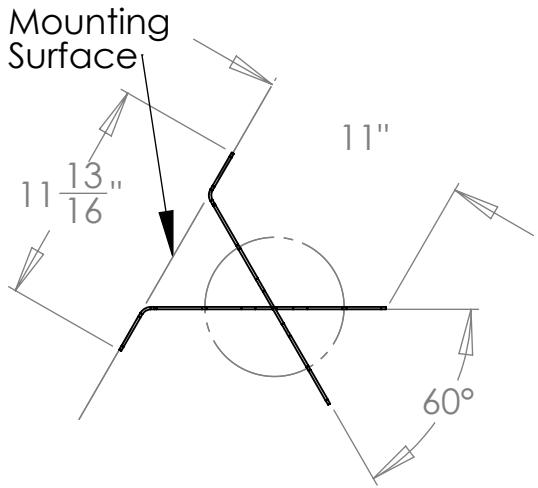

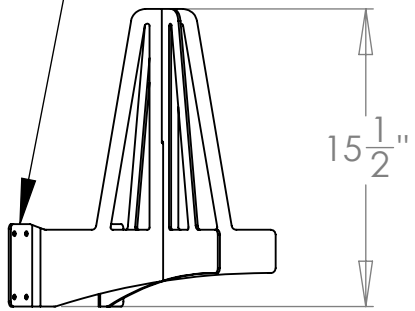

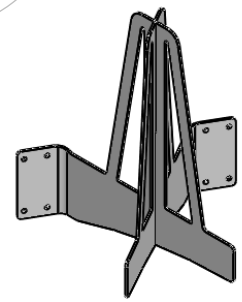

ITD1135

Dimensions for reference only.

In The Ditch Towing Products	
PART NAME 28" Vert. Mnt. Cone Holder	
SIZE A	PART NO. ITD1102
SHEET SCALE 1:10	SHEET 1 of 1

5 4 3 2 1